HISTORY INFORMATION FOR THE FOLLOWING MANUAL:

SERVICE MANUAL

FX CHASSIS

MODEL NAME	REMOTE COMMANDER	DESTINATION
KDL-40S4100	RM-YD025	CANADA
KDL-40S4100	RM-YD025	MEXICO
KDL-40S4100	RM-YD025	US
KDL-46S4100	RM-YD025	CANADA
KDL-46S4100	RM-YD025	MEXICO
KDL-46S4100	RM-YD025	US

ORIGINAL MANUAL ISSUE DATE: 4/2008

☛ :UPDATED ITEM

REVISION DATE	SUBJECT
4/2008	No revisions or updates are applicable at this time.
5/2008	Reissue entire service manual to include PWBs.
8/2008	Reissue entire manual due to multiple updates.

LCD DIGITAL COLOR TELEVISION

SONY®

9-883-778-03

Self Diagnosis Supported model

SERVICE MANUAL

FX CHASSIS

MODEL NAME	REMOTE COMMANDER	DESTINATION
KDL-40S4100	RM-YD025	CANADA
KDL-40S4100	RM-YD025	MEXICO
KDL-40S4100	RM-YD025	US
KDL-46S4100	RM-YD025	CANADA
KDL-46S4100	RM-YD025	MEXICO
KDL-46S4100	RM-YD025	US

KDL-40S4100

RM-YD025

LCD DIGITAL COLOR TELEVISION

SONY®

9-883-778-03

TABLE OF CONTENTS

SECTION TITLE	PAGE
Specifications	4
Warnings and Cautions - ENGLISH	6
Warnings and Cautions - FRENCH	7
Safety-Related Component Warning	8
Safety Check-Out	10
Self-Diagnostic Function	11
SECTION 1: DISASSEMBLY	**12**
1-1. Rear Cover Removal	12
1-2. Function Key Removal	12
1-3. A Board and G Board Removal	13
1-4. Table-Top Stand Assembly and Under Cover Removal	14
1-5. AC Inlet and Bracket Removal	14
1-6. Structural Frames and Brackets Removal (KDL-40S4100 Only)	15
1-7. Structural Frames and Brackets Removal (KDL-46S4100 Only)	16
1-8. LoudspeaKer Removal	17
1-9. Bottom Cover, H2 Board, H3 Board and Lens LED Removal	17
1-10. LCD Panel Removal	18
1-11. Balancer (ETC-Inverter MT) Board Removal	19
Wire Dressing	20
Overall View	20
SECTION 2: SERVICE ADJUSTMENTS	**21**
2-1. Resetting to Factory Defaults after Board Replacement	21

SECTION TITLE	PAGE
SECTION 3: DIAGRAMS	**22**
3-1. Circuit Boards Location	22
3-2. Printed Wiring Boards and Schematic Diagrams Information	22
3-3. Block Diagram	24
3-4. Schematics and Supporting Information	25
A Board Schematic Diagram (1 of 19)	25
A Board Schematic Diagram (2 of 19)	26
A Board Schematic Diagram (3 of 19)	27
A Board Schematic Diagram (4 of 19)	28
A Board Schematic Diagram (5 of 19)	29
A Board Schematic Diagram (6 of 19)	30
A Board Schematic Diagram (7 of 19)	31
A Board Schematic Diagram (8 of 19)	32
A Board Schematic Diagram (9 of 19)	33
A Board Schematic Diagram (10 of 19)	34
A Board Schematic Diagram (11 of 19)	35
A Board Schematic Diagram (12 of 19)	36
A Board Schematic Diagram (13 of 19)	37
A Board Schematic Diagram (14 of 19)	38
A Board Schematic Diagram (15 of 19)	39
A Board Schematic Diagram (16 of 19)	40
A Board Schematic Diagram (17 of 19)	41
A Board Schematic Diagram (18 of 19)	42
A Board Schematic Diagram (19 of 19)	43
G Board Schematic Diagram (1 of 3)	44
G Board Schematic Diagram (2 of 3)	45
G Board Schematic Diagram (3 of 3)	46
H1 Board Schematic Diagram	47
H2 Board Schematic Diagram	48
H3 Board Schematic Diagram	49
SECTION 4: EXPLODED VIEWS	**50**
4-1. Rear Cover Assembly and Table-Top Stand Assembly	50
4-2. Chassis	51
4-3. Bezel Assembly and LCD Panel (KDL-40S4100 Only)	52
4-4. Bezel Assembly and LCD Panel (KDL-46S4100 Only)	53
4-5. Screw Legend	54
APPENDIX A: ENCRYPTION KEY COMPONENTS	**A-1**

SPECIFICATIONS

Power Requirements 120V - 240V AC, 50/60Hz

VIDEO (IN) 1/2:

S Video (4-Pin Mini DIN) (Video 1 only)

Y: 1.0 Vp-p, 75 ohms unbalanced, sync negative

C: 0.286 Vp-p (Burst signal), 75 ohms

Video

1 Vp-p, 75 ohms unbalanced, sync negative

Audio

500 mVrms (100% modulation)

Impedance:47 kilohms

COMPONENT IN 1/2:

YP_BP_R (Component Video)

Y:1.0 Vp-p, 75 ohms unbalanced, sync negative

P_B:0.7 Vp-p, 75 ohms

P_R:0.7 Vp-p, 75 ohms

Signal format: 480i, 480p, 720p, 1080i, 1080p

Audio

500 mVrms (100% modulation)

Impedance: 47 kilohms

HDMI IN 1/2/3:

HDMI

Video: 480i, 480p, 720p, 1080i, 1080p, 1080/24p

Audio: Two channel linear PCM 32, 44.1, and 48 kz, 16, 20 and 24 bits

Audio (HDMI IN 1 only):

500 mVrms (100% modulation)

Impedance: 47 kilohms

AUDIO OUT:

500 mVrms (100% modulation)

More than 500 mVrms (Fixed)

DIGITAL AUDIO OUT (OPTICAL):

Optical Digital Audio Output (PCM/Dolby Digital)

PC IN:

Analog RGB (D-sub 15-pin):

0.7 Vp-p, 75 ohms, positive

Audio (Stereo mini jack):

500 mVrms

Impedance: 47 kilohms

Trademark Information

Macintosh is a trademark of Apple Inc., registered in the U.S. and other countries.

HDMI, the HDMI logo and High-Definition Multimedia Interface are trademarks or registered trademarks of HDMI Licensing LLC.

Manufactured under license from Dolby Laboratories. “Dolby” and the double-D symbol are trademarks of Dolby Laboratories.

Blu-ray Disc is a trademark.

“BRAVIA”, BRAVIA and R are trademarks of Sony Corporation.

Design and specifications are subject to change without notice.

	KDL-40S4100	KDL-46S4100
Power Consumption		
in use	210W	260W
in standby	Less than 1.0 W	Less than 1.0 W
Speaker Output (W)	10W + 10W	10W + 10W
mm	57.5 x 126	65 x 147
in	$2\ ^{3/8}$ x 5	$2\ ^{5/8}$ x $5\ ^{7/8}$
Dimensions (W x H x D) with stand		
mm	997 x 689 x 276	1130 x 784 x 308 mm
in	$39\ ^{3/8}$ x $27\ ^{1/4}$ x $10\ ^{7/8}$	$44\ ^{1/2}$ x $30\ ^{7/8}$ x $12\ ^{1/4}$
Dimensions (W x H x D) without stand		
mm	997 x 652 x 111	1130 x 746 x 115
in	$39\ ^{3/8}$ x $25^{3/4}$ x $4^{3/8}$	$44\ ^{1/2}$ x $29\ ^{3/8}$ x $4\ ^{5/8}$
Mass with stand		
kg	22.7kg	30kg
lbs	50 lbs 1 oz	66 lbs 3 oz
without stand		
kg	19.9kg	26.5 kg
lbs	43 lbs 14 oz	58 lbs 7 oz

All measurements are approximations.

Television system

NTSC	American TV Standard
ATSC (8VSB terrestrial)	ATSC compliant 8VSB
QAM on cable	ANSI/SCTE 07 2000

Channel coverage

	Analog	Digital
Terrestrial	2-69	2-69
Cable	1-135	1-135

Antenna

75-ohm external terminal for VHF/UHF

Panel System

LCD (Liquid Crystal Display) Panel

Display Resolution (horizontal x vertical):

1,920 dots x 1,080 lines

Screen Size (measured diagonally)

approx. 40 inches (KDL-40S4100 only)
approx. 46 inches (KDL-46S4100 only)

Supplied Accessories

Remote Commander RM-YD025
Two Size AA (R6) Batteries
AC Power Cord
Table-Top Stand
Screws (4)
Cable Band
Operating Instructions
Quick Setup Guide
Warranty Card
Online Registration Card (US only)

Optional Accessories

Connecting Cables
Support Belt Kit
Wall-Mount Bracket
SU-WL500
TV Stand
WS-S10LS/SU-FL300M (KDL-40S4100 only)
WS-S10LS/SU-FL300M/SU-FL300L (KDL-46S4100 only)

WARNINGS AND CAUTIONS - ENGLISH

CAUTION

These servicing instructions are for use by qualified service personnel only. To reduce the risk of electric shock, do not perform any servicing other than that contained in the operating instructions unless you are qualified to do so.

CARRYING THE TV

To avoid dropping the TV and causing serious injury, be sure to follow these guidelines:

- Before carrying the TV, disconnect all cables.
- Carrying the large size TV requires two or more people.
- When you carry the TV, place your hand as illustrated and hold it securely. Do not put stress on the LCD panel.

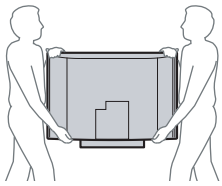

- When carrying, do not subject the TV to shocks or vibration, or excessive force.

- When lifting or moving the TV, hold it firmly from the bottom. Place your palm directly underneath but do not squeeze the panel's speaker grille area.

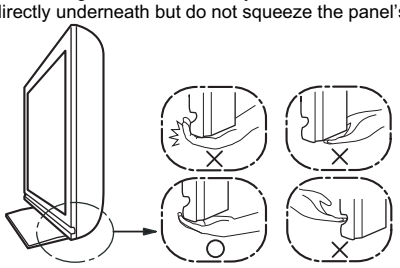

- When carrying the TV, to avoid pinching your hands or fingers do not put your hands between the TV and stand, or hold the bottom corner of the TV.

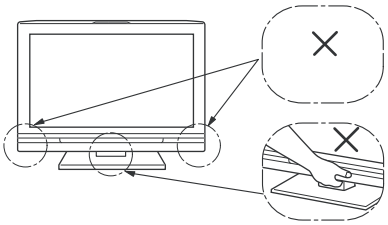

WARNING!!

An isolation transformer should be used during any service to avoid possible shock hazard, because of live chassis. The chassis of this receiver is directly connected to the ac power line.

⚠ SAFETY-RELATED COMPONENT WARNING!!

Components identified by shading and ⚠ mark on the schematic diagrams, exploded views, and in the parts list are critical for safe operation. Replace these components with Sony parts whose part numbers appear as shown in this manual or in supplements published by Sony. Circuit adjustments that are critical for safe operation are identified in this manual. Follow these procedures whenever critical components are replaced or improper operation is suspected.

WARNINGS AND CAUTIONS - FRENCH

ATTENTION!!

Ces instructions de service sont à l'usage du personnel de service qualifié seulement. Pour prévenir le risque de choc électrique, ne pas faire l'entretien autre que celui contenu dans le Mode d'emploi à moins que vous soyez qualifié faire ainsi.

TRANSPORTER LE TÉLÉVISEUR

Pour éviter d'échapper le téléviseur et de causer des blessures graves, assurez-vous de suivre ces directives :

- Avant de transporter le téléviseur, débranchez tous les câbles.
- Il faut deux personnes ou plus pour transporter le téléviseur de grande dimension.
- Lorsque vous transportez le téléviseur, placez votre main tel qu'illustré et tenez-le fermement. N'imposez pas de charge sur le panneau ACL.
- Lorsque vous transportez le téléviseur, ne le soumettez pas à des chocs, à des vibrations ou à une force excessive.

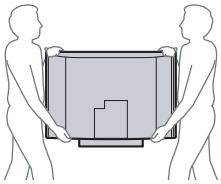

- Lorsque vous soulevez ou déplacez le téléviseur, tenez-le fermement à partir du bas. Placez votre paume directement en dessous, mais n'appuyez pas sur le panneau avant ou la région encastrée.

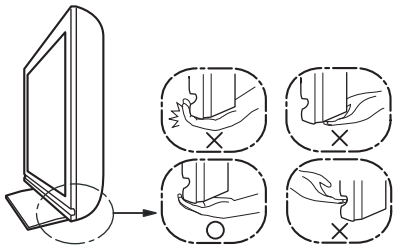

- Lorsque vous transportez le téléviseur, pour éviter de pincer vos mains ou vos doigts, ne placez pas vos mains entre le téléviseur et le suppor ou ne tenez pas le coin inférieur du téléviseur.

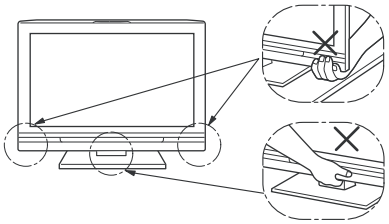

Afin d'eviter tout risque d'elect~~rocution provenant d'un châssis sous tension, un transformateur d'isolement doit etre utilisé l~~ors de tout dépannage. Le châssis de ce récepteur est directement raccordé à l'alimentation du secteur.

⚠ ATTENTION AUX COMPOSANTS RELATIFS A LA SECURITE!!

Les composants identifies par une trame et par une marque ⚠ sur les schemas de principe, les vues explosees et les listes de pieces sont d'une importance critique pour la securite du fonctionnement. Ne les remplacer que par des composants Sony dont le numero de piece est indique dans le present manuel ou dans des supplements publies par Sony. Les reglages de circuit dont l'importance est critique pour la securite du fonctionnement sont identifies dans le present manuel. Suivre ces procedures lors de chaque remplacement de composants critiques, ou lorsqu'un mauvais fonctionnement suspecte.

SAFETY-RELATED COMPONENT WARNING

There are critical components used in LCD color TVs that are important for safety. These components are identified with shading and ⚠ mark on the schematic diagrams and the electrical parts list. It is essential that these critical parts be replaced only with the part number specified in the electrical parts list to prevent electric shock, fire, or other hazard.

NOTE: Do not modify the original design without obtaining written permission from the manufacturer or you will void the original parts and labor guarantee.

USE CAUTION WHEN HANDLING THE LCD PANEL

When repairing the LCD panel, be sure you are grounded by using a wrist band.

When installing the LCD panel on a wall, the LCD panel must be secured using the 4 mounting holes on the rear cover.

To avoid damaging the LCD panel:

- → do not press on the panel or frame edge to avoid the risk of electric shock.
- → do not scratch or press on the panel with any sharp objects.
- → do not leave the module in high temperatures or in areas of high humidity for an extended period of time.
- → do not expose the LCD panel to direct sunlight.
- → avoid contact with water. It may cause a short circuit within the module.
- → disconnect the AC adapter when replacing the backlight (CCFL) or inverter circuit. (High voltage occurs at the inverter circuit at 650Vrms.)
- → always clean the LCD panel with a soft cloth material.
- → use care when handling the wires or connectors of the inverter circuit. Damaging the wires may cause a short.
- → protect the panel from ESD to avoid damaging the electronic circuit (C-MOS).

LEAKAGE CURRENT HOT CHECK CIRCUIT

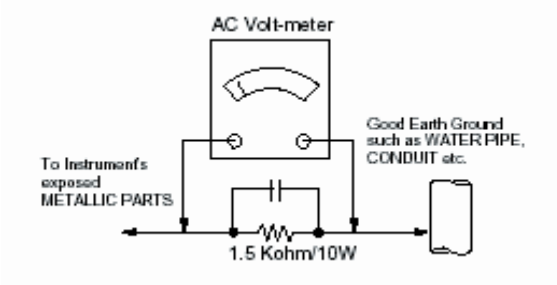

example 1

The circuit boards used in these models have been processed using Lead Free Solder. The boards are identified by the LF logo located close to the board designation e.g. H1 etc [see example]. The servicing of these boards requires special precautions to be taken as outlined below.

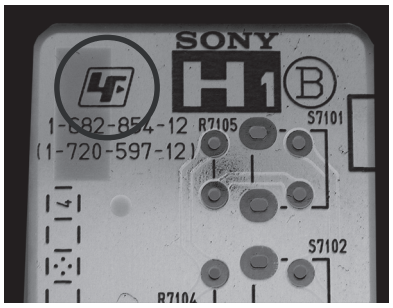

It is strongly recommended to use Lead Free Solder material in order to guarantee optimal quality of new solder joints.
Lead Free Solder is available under the following part numbers :

Part number	Diameter	Remarks
7-640-005-19	0.3mm	0.25Kg
7-640-005-20	0.4mm	0.50Kg
7-640-005-21	0.5mm	0.50Kg
7-640-005-22	0.6mm	0.25Kg
7-640-005-23	0.8mm	1.00Kg
7-640-005-24	1.0mm	1.00Kg
7-640-005-25	1.2mm	1.00Kg
7-640-005-26	1.6mm	1.00Kg

Due to the higher melting point of Lead Free Solder the soldering iron tip temperature needs to be set to 370 degrees centigrade. This requires soldering equipment capable of accurate temperature control coupled with a good heat recovery characteristics.

For more information on the use of Lead Free Solder, please refer to *http://www.sony-training.com*

SAFETY CHECK-OUT

After correcting the original service problem, perform the following safety checks before releasing the set to the customer:

1. Check the area of your repair for unsoldered or poorly soldered connections. Check the entire board surface for solder splashes and bridges.

2. Check the interboard wiring to ensure that no wires are “pinched” or touching high-wattage resistors.

3. Check that all control knobs, shields, covers, ground straps, and mounting hardware have been replaced. Be absolutely certain that you have replaced all the insulators.

4. Look for unauthorized replacement parts, particularly transistors, that were installed during a previous repair. Point them out to the customer and recommend their replacement.

5. Look for parts which, though functioning, show obvious signs of deterioration. Point them out to the customer and recommend their replacement.

6. Check the line cords for cracks and abrasion. Recommend the replacement of any such line cord to the customer.

7. Check the antenna terminals, metal trim, “metallized” knobs, screws, and all other exposed metal parts for AC leakage. Check leakage as described below.

Leakage Test

The AC leakage from any exposed metal part to earth ground and from all exposed metal parts to any exposed metal part having a return to chassis, must not exceed 0.5 mA (500 microamperes). Leakage current can be measured by any one of three methods.

1. A commercial leakage tester, such as the Simpson 229 or RCA WT-540A. Follow the manufacturers’ instructions to use these instructions.

2. A battery-operated AC milliampmeter. The Data Precision 245 digital multimeter is suitable for this job.

3. Measuring the voltage drop across a resistor by means of a VOM or battery-operated AC voltmeter. The “limit” indication is 0.75 V, so analog meters must have an accurate low voltage scale. The Simpson’s 250 and Sanwa SH-63TRD are examples of passive VOMs that are suitable. Nearly all battery-operated digital multimeters that have a 2 VAC range are suitable (see Figure A).

How to Find a Good Earth Ground

A cold-water pipe is a guaranteed earth ground; the cover-plate retaining screw on most AC outlet boxes is also at earth ground. If the retaining screw is to be used as your earth ground, verify that it is at ground by measuring the resistance between it and a cold-water pipe with an ohmmeter. The reading should be zero ohms.

If a cold-water pipe is not accessible, connect a 60- to 100-watt trouble- light (not a neon lamp) between the hot side of the receptacle and the retaining screw. Try both slots, if necessary, to locate the hot side on the line; the lamp should light at normal brilliance if the screw is at ground potential (see Figure B).

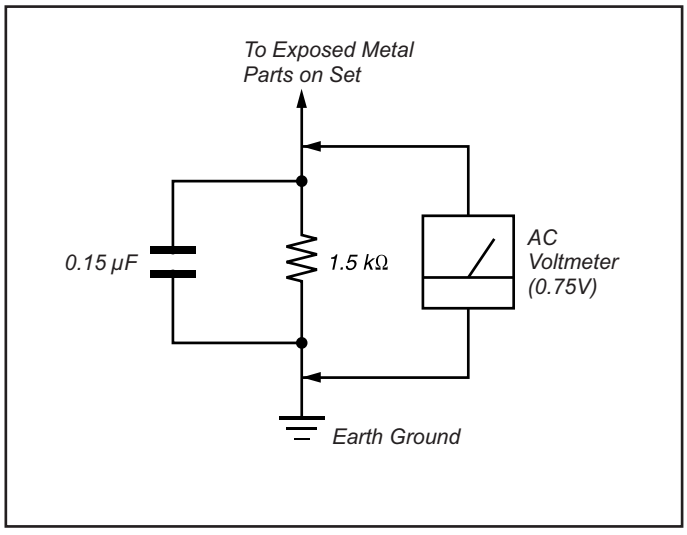

Figure A. Using an AC voltmeter to check AC leakage.

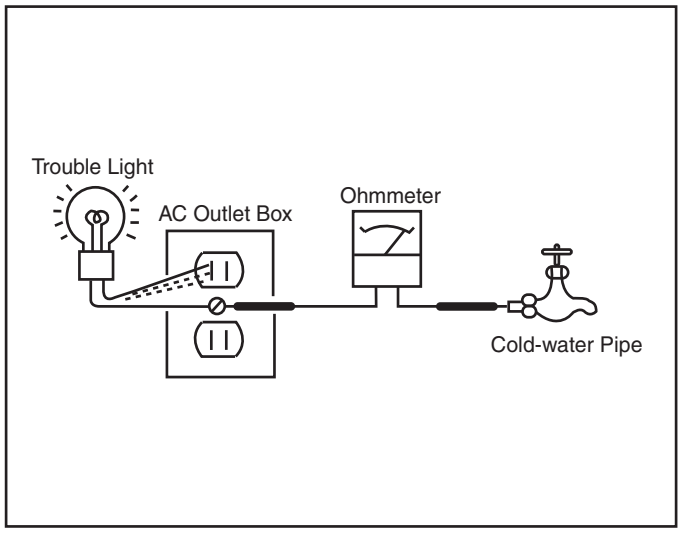

Figure B. Checking for earth ground.

SELF-DIAGNOSTIC FUNCTION

Self Diagnosis Supported model

IMPORTANT:
The units in this manual DO NOT contain a self-diagnostic function. If an error occurs, the TV will not stay on. It is our recommendation that if a repair is required for this set, the technician should bring both the A Board and the G Board to the customer location.

Control Buttons

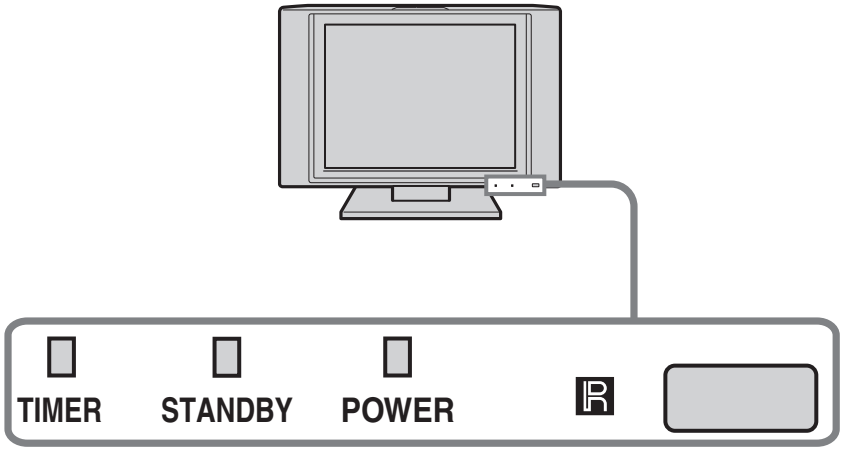

Description of LED Indictors
The units in this manual DOES NOT contain a self-diagnostic function.

SECTION 1: DISASSEMBLY

1-1. REAR COVER REMOVAL

(1) Remove 2 screws from HDMI connectors
(2) Remove 2 screws from terminal positions
(3) Remove 6 screws
(4) Remove 19 screws

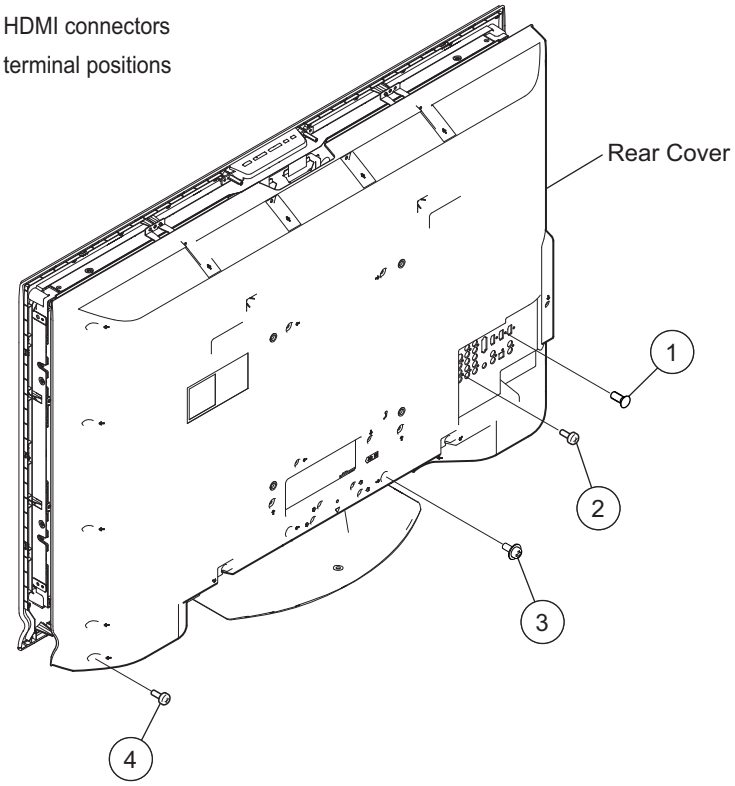

1-2. FUNCTION KEY REMOVAL

(1) Remove 2 screws
(2) Release hooks and remove Function Key and H1 Board
(3) Disconnect 1 connector
(4) Remove 1 screw and release Ground Wire

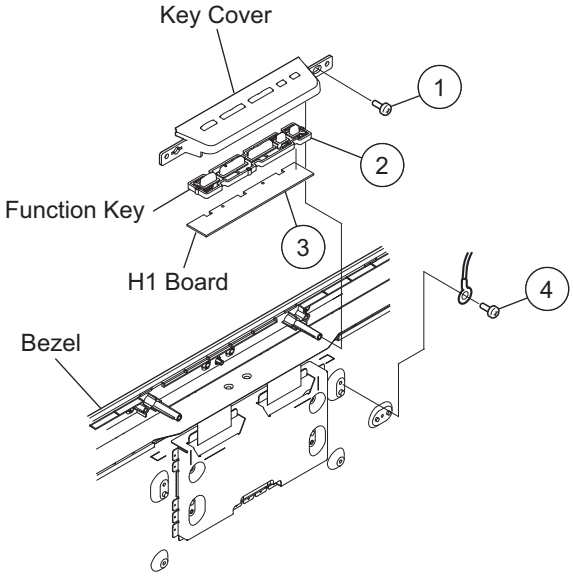

1-3. A BOARD AND G BOARD REMOVAL

(1) Disconnect 4 connectors
(2) Remove 1 screw from Side Bracket
(3) Remove 1 screw from HDMI position
(4) Remove 2 screws
(5) Remove 8 screws
(6) Remove Hexagon Nut from tuner
(7) Remove 1 screw
(8) Remove 9 screws (KDL-40S4100 ONLY)
Remove 10 screws (KDL-46S4100 ONLY)
(9) Disconnect 4 connectors
(10) Remove 8 screws (KDL-46S4100 ONLY)
(11) Disconnect 6 connectors (KDL-46S4100 ONLY)
(12) Remove 8 screws (KDL-40S4100 ONLY)
(13) Disconnect 6 connectors (KDL-40S4100 ONLY)

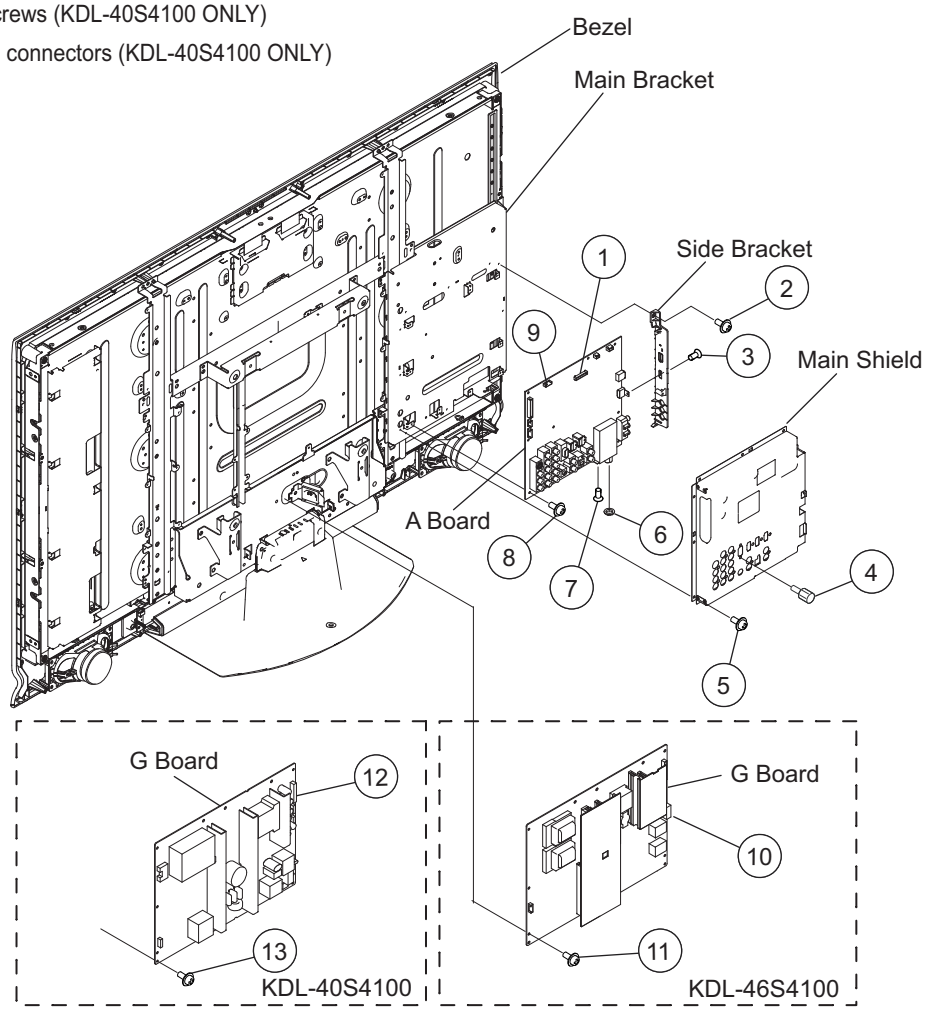

1-4. TABLE-TOP STAND ASSEMBLY AND UNDER COVER REMOVAL

(1) Remove 4 screws
(2) Remove 2 screws

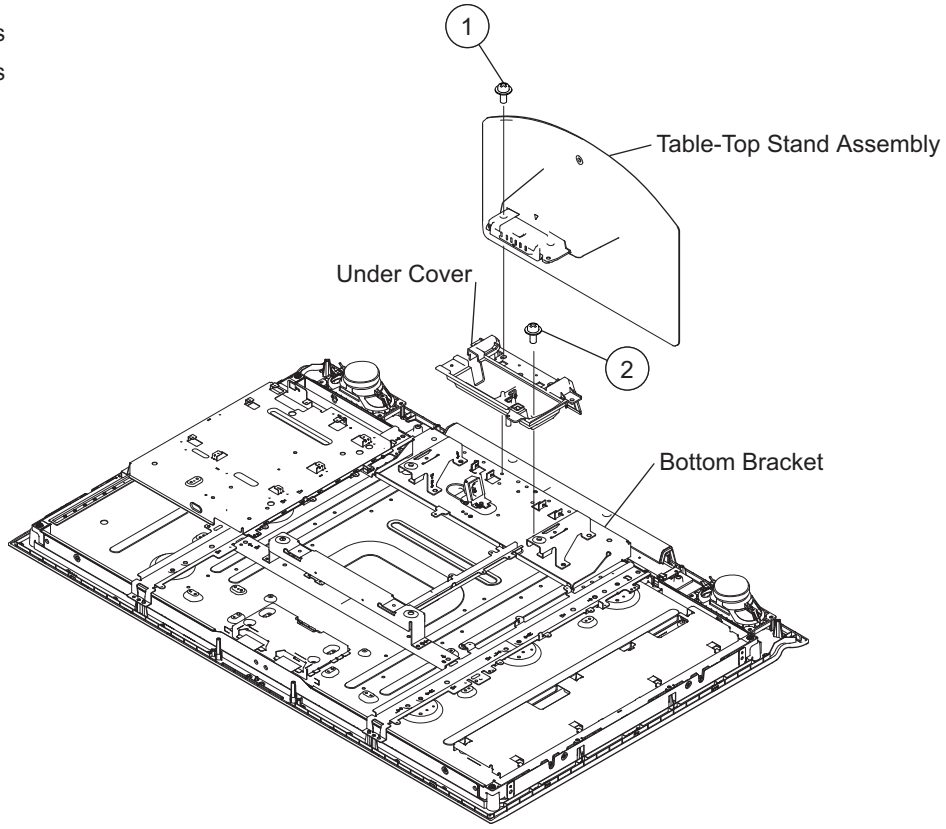

1-5. AC INLET AND BRACKET REMOVAL

(1) Remove 1 screw
(2) Remove 1 screw and release Earth Terminal
(3) Remove AC Inlet from Bracket

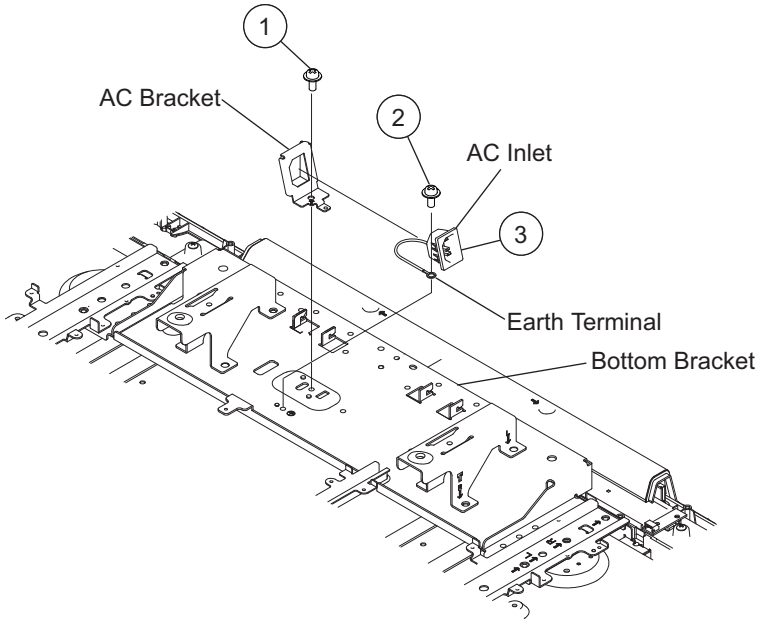

1-6. STRUCTURAL FRAMES AND BRACKETS REMOVAL (KDL-40S4100 ONLY)

1. Remove 1 screw from Main Bracket
2. Remove 4 screws from Main Bracket and Spine frame
3. Remove 4 screws from both Top Vesa Brackets
4. Remove 2 screws from Vesa Bracket Support
5. Remove 4 screws from both Spine Frames
6. Remove 2 screws from both Spine Frames
7. Remove 1 screw from G Board Support
8. Remove 4 screws from both Bottom Vesa Brackets
9. Remove 4 screws from Bottom Bracket

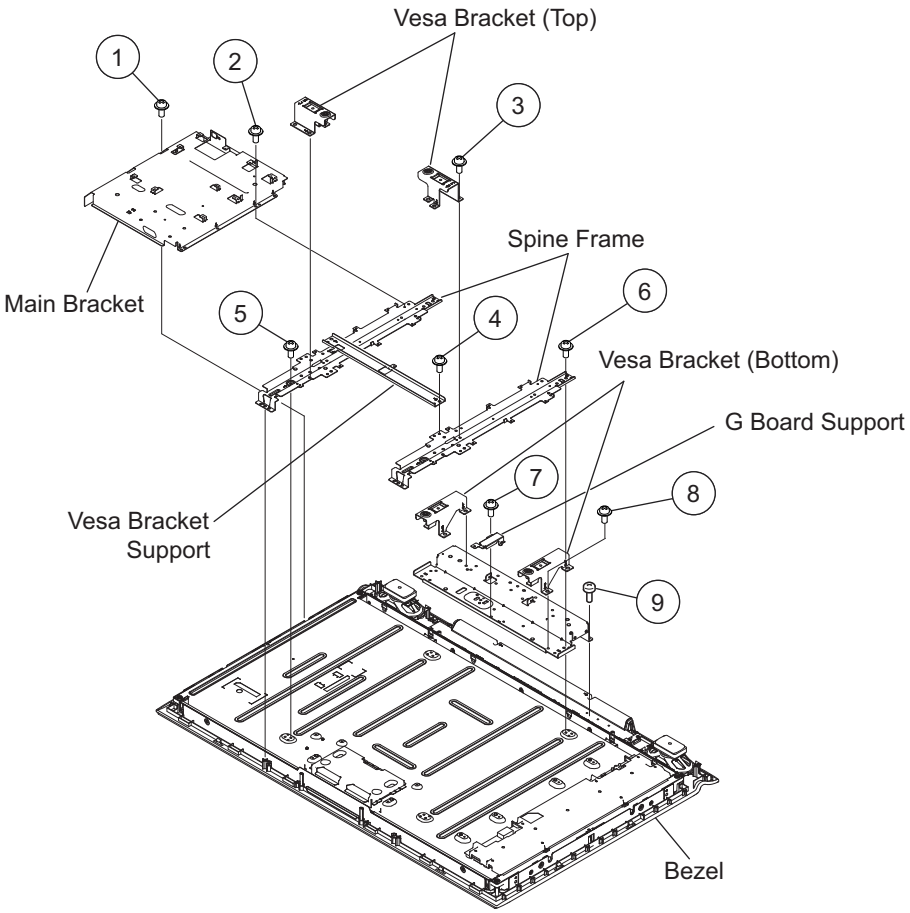

1-7. STRUCTURAL FRAMES AND BRACKETS REMOVAL (KDL-46S4100 ONLY)

1. Remove 1 screw from Main Bracket
2. Remove 2 screws from Main Bracket and Spine frame
3. Remove 2 screws from Top Vesa Bracket
4. Remove 2 screws from G Board Support 1
5. Remove 2 screws from G Board Support 2
6. Remove 2 screws from Vesa Bracket Support
7. Remove 10 screws from Spine Frames
8. Remove 4 screws from both Bottom Vesa Brackets
9. Remove 4 screws from Bottom Bracket

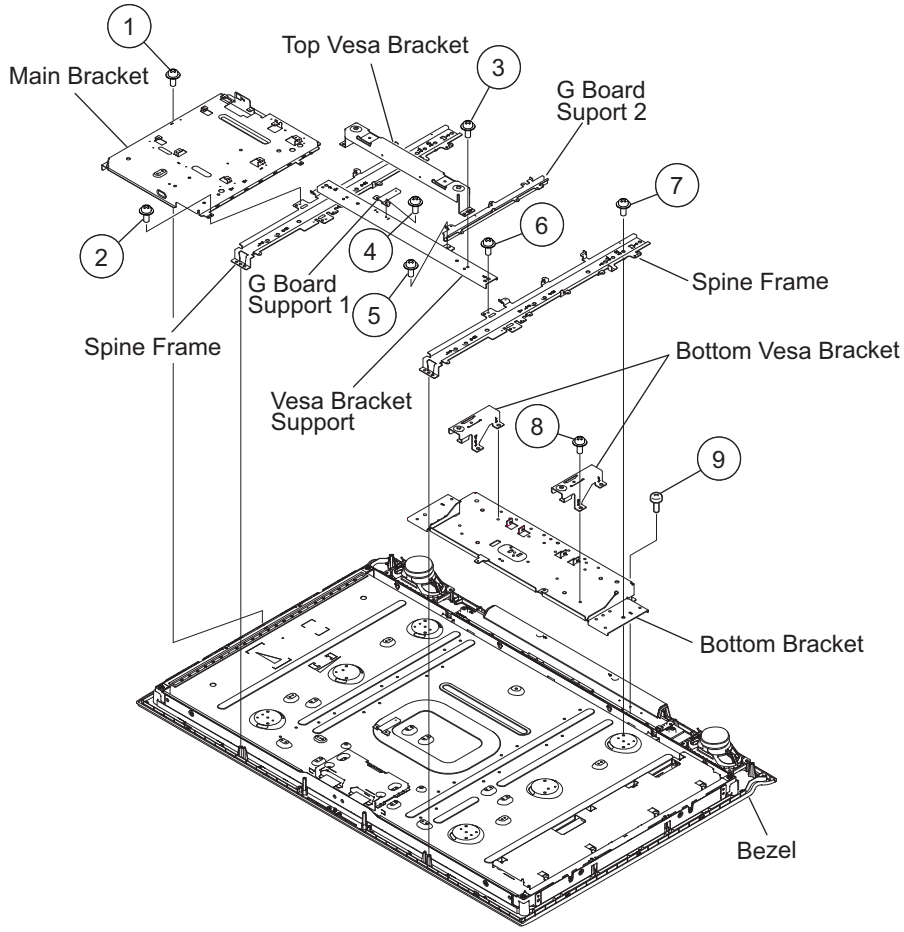

1-8. LOUDSPEAKER REMOVAL

(1) Remove 4 screws from each speaker

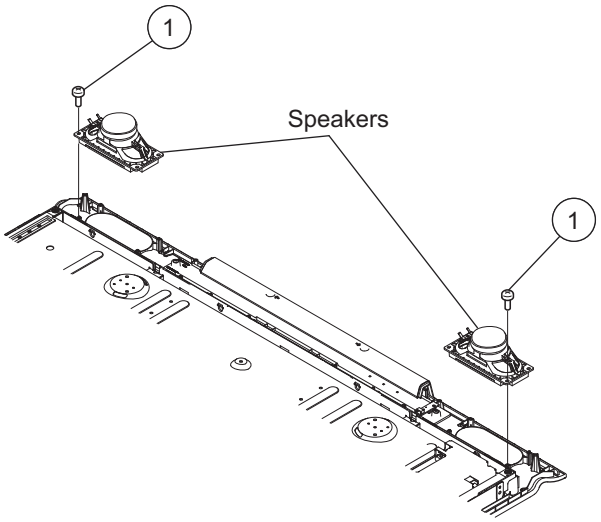

1-9. BOTTOM COVER, H2 BOARD, H3 BOARD AND LENS LED REMOVAL

(1) Remove 2 screws
(2) Disconnect 1 connector and slide out H3 (LED) Board
(3) Disconnect 1 connector and remove 1 screw from H2 (IR) Board
(4) Remove 4 screws

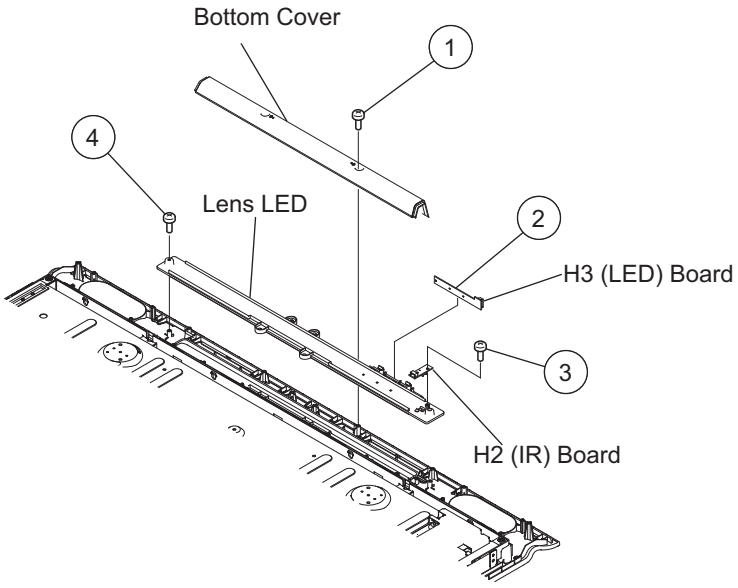

1-10. LCD PANEL REMOVAL

① Disconnect 2 connectors
② Remove 2 screws

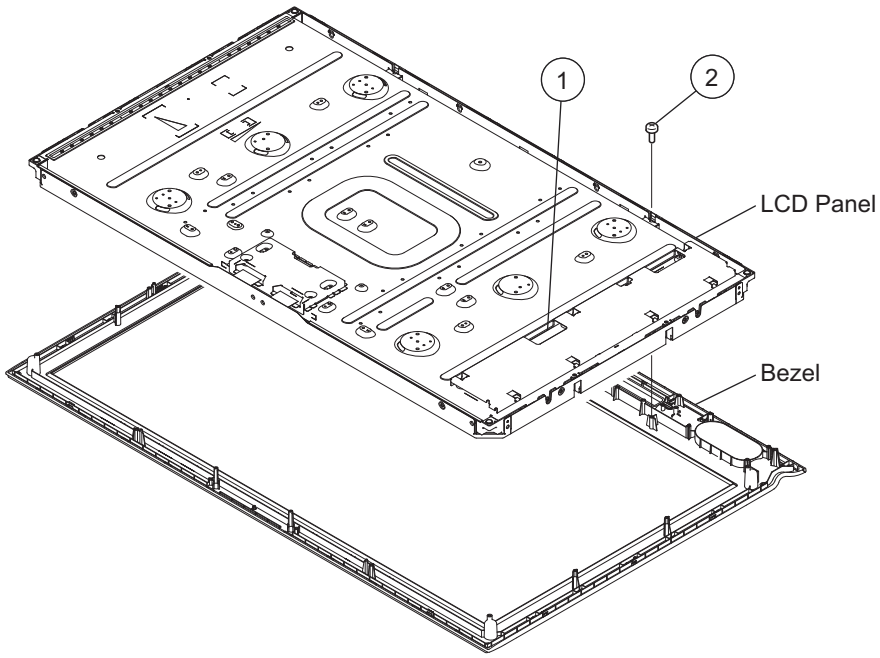

☛1-10-1.CLEANING THE LCD PANEL

CAUTION: When cleaning the TV, be sure to unplug the power cord to avoid any chance of electric shock.

① Clean the cabinet of the TV with a dry soft cloth.
② Wipe the LCD screen gently with a soft cloth.

- → Stubborn stains may be removed with a cloth slightly moistened with a solution of mild soap and warm water.
- → If using a chemically pretreated cloth, please follow the instruction provided on the package.
- → Never use strong solvents such as a thinner, alcohol or benzine for cleaning.
- → Periodic vacuuming of the ventilation openings is recommended to ensure to proper ventilation.

1-11. BALANCER (ETC-INVERTER MT) BOARD REMOVAL

1. Remove 8 screws (KDL-40S4100 ONLY)
   Remove 7 screws (KDL-46S4100 ONLY)
2. Pull out the board from Lamp Socket

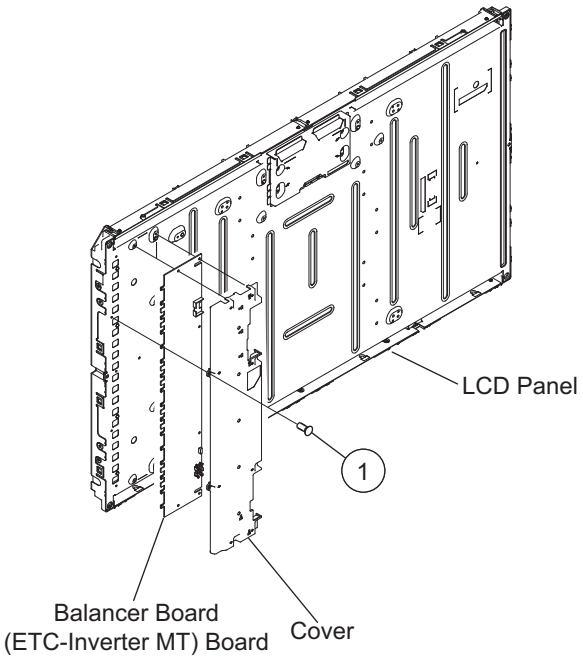

WARNING!

NEVER REMOVE THE SCREWS SECURING THE PLASTIC STRIP HOLDING THE LAMP SOCKETS DAMAGE TO THE BACKLIGHT TUBES WILL OCCUR!

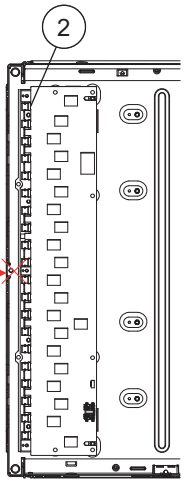

Balancer (ETC-Inverter MT) Board

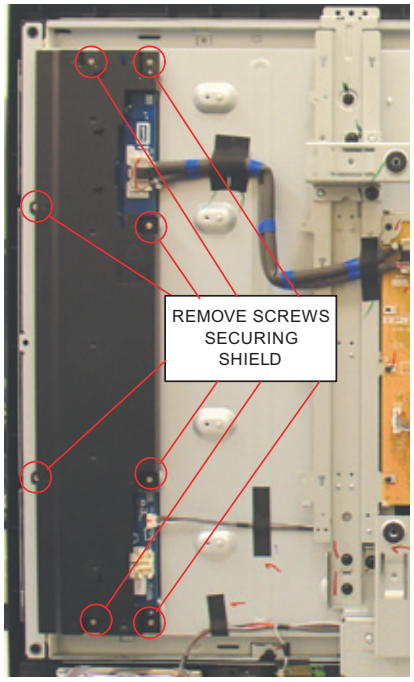

SHIELD REMOVAL

WARNING!

NEVER REMOVE THE SCREWS SECURING THE PLASTIC STRIP HOLDING THE LAMP SOCKETS DAMAGE TO THE BACKLIGHT TUBES WILL OCCUR!

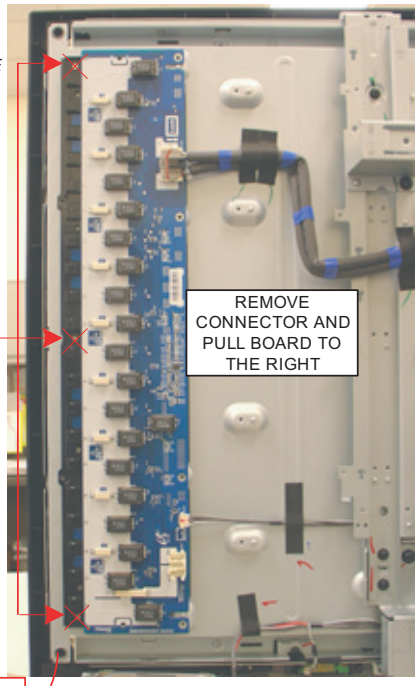

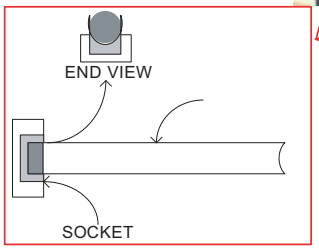

BALANCER (ETC-INVERTER) BOARD REMOVAL

Only remove the screws securing the inverter cover which may be metal or plastic. The remaining plastic strip contains sockets for the fluorescent backlights and should never be loosened. The backlights will pop out of the sockets and/or break the backlight requiring a LCD panel replacement.

WIRE DRESSING

OVERALL VIEW

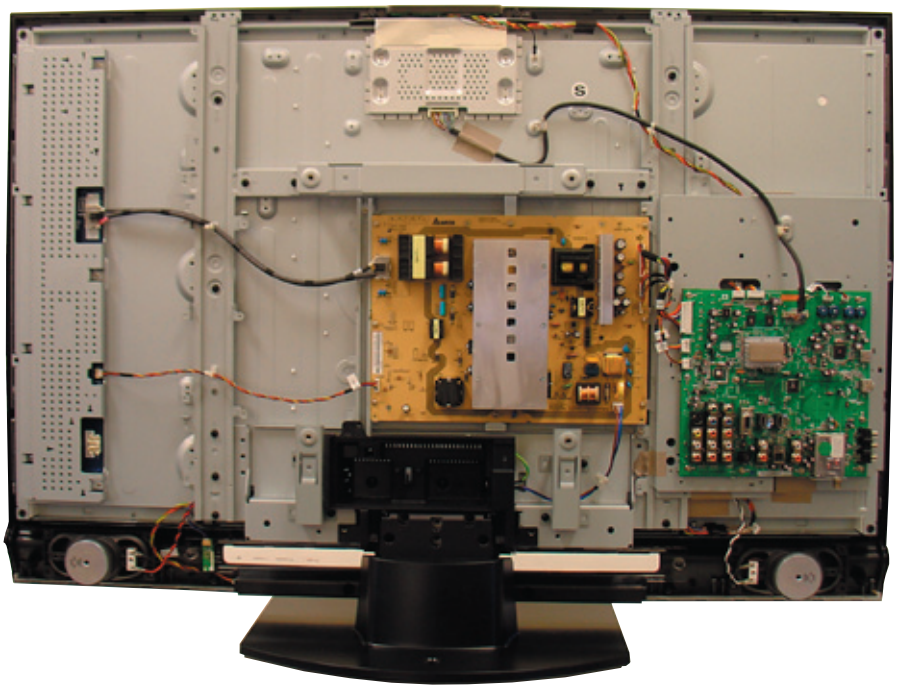

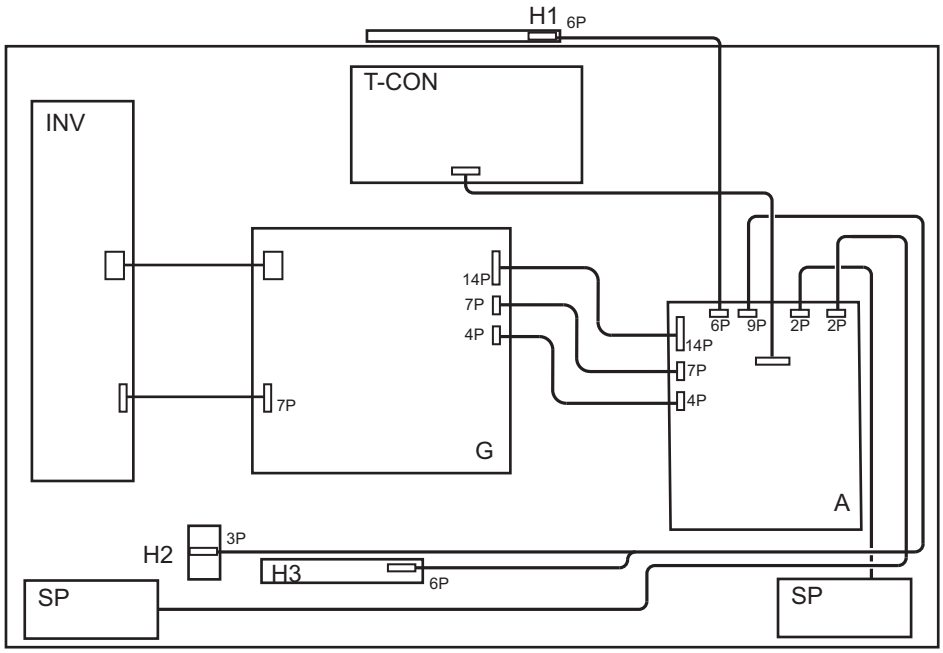

SECTION 2: SERVICE ADJUSTMENTS

2-1. RESETTING TO FACTORY DEFAULTS AFTER BOARD REPLACEMENT

Traditional Service Mode is not available in this chassis. The only option for service technicians is to reset all of the settings to the Factory Default from the Self Diagnostic screen.

CAUTION: Resetting the TV to the Factory Defaults will *over-write all customer settings* including Parental Lock setting. Before performing this reset, contact the customer to determine what adjustments they have made.

1. Turn on the TV.
2. While holding down the ▲ button on the remote control, press the **POWER** button on the TV.
   The Initial Setup screen displays.
3. Select the language for the TV, then press the ⊕ button on the remote control.
4. To start Auto Program, press the ⊕ button on the remote control to select **OK**.
   NOTE: Allow 30+ minutes for Auto Program to complete.
5. Using the customers information, reset their adjustments.

RM-YD025

SECTION 3: DIAGRAMS

3-1. CIRCUIT BOARDS LOCATION

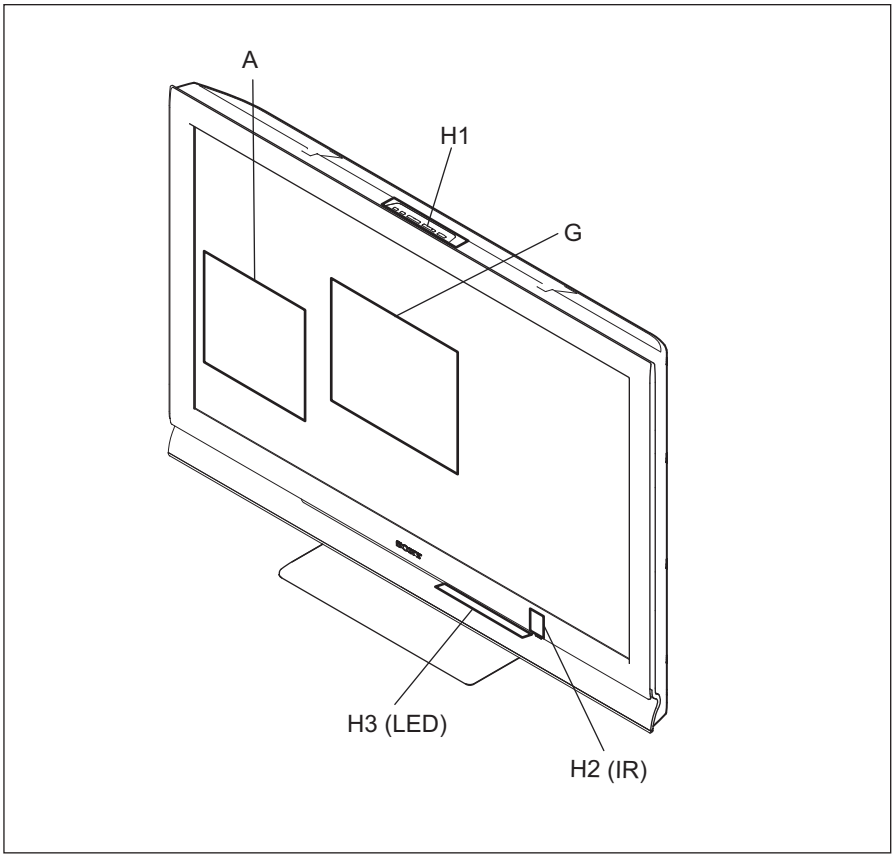

3-2. PRINTED WIRING BOARDS AND SCHEMATIC DIAGRAMS INFORMATION

All capacitors are in µF unless otherwise noted. pF : µµF 50WV or less are not indicated except for electrolytics and tantalums.

All electrolytics are in 50V unless otherwise specified.

All resistors are in ohms. kΩ=1000Ω, MΩ=1000kΩ

Indication of resistance, which does not have one for rating electrical power, is as follows: Pitch : 5mm
Rating electrical power : $^1/_4$ W

$^1/_4$ W in resistance, $^1/_{10}$ W and $^1/_{16}$ W in chip resistance.

: nonflammable resistor

: fusible resistor

: internal component

: panel designation and adjustment for repair

: earth ground

: earth-chassis

All variable and adjustable resistors have characteristic curve B, unless otherwise noted.

Readings are taken with a color-bar signal input.

Readings are taken with a 10MΩ digital multimeter.

Voltages are DC with respect to ground unless otherwise noted.

Voltage variations may be noted due to normal production tolerances.

All voltages are in V.

S : Measurement impossibility.

: B+line.

: B-line. (Actual measured value may be different).

: signal path. (RF)

Circled numbers are waveform references.

The components identified by shading and ⚠ symbol are critical for safety. Replace only with part number specified.

The symbol indicates a fast operating fuse and is displayed on the component side of the board. Replace only with fuse of the same rating as marked.

Les composants identifies per un trame et une marque ⚠ sont critiques pour la securite. Ne les remplacer que par une piece portant le numero specifie.

Le symbole indique une fusible a action rapide. Doit etre remplace par une fusible de meme yaleur, comme maque.

NOTE: The components identified by a red outline and a mark contain confidential information. Specific instructions must be adhered to whenever these components are repaired and/or replaced.
See Appendix A: Encryption Key Components in the back of this manual.

REFERENCE INFORMATION

RESISTOR

: RN	METAL FILM
: RC	SOLID
: FPRD	NONFLAMMABLE CARBON
: FUSE	NONFLAMMABLE FUSIBLE
: RW	NONFLAMMABLE WIREWOUND
: RS	NONFLAMMABLE METAL OXIDE
: RB	NONFLAMMABLE CEMENT
: ※	ADJUSTMENT RESISTOR

CAPACITOR

: TA	TANTALUM
: PS	STYROL
: PP	POLYPROPYLENE
: PT	MYLAR
: MPS	METALIZED POLYESTER
: MPP	METALIZED POLYPROPYLENE
: ALB	BIPOLAR
: ALT	HIGH TEMPERATURE
: ALR	HIGH RIPPLE

COIL

: LF-8L MICRO INDUCTOR

Terminal name of semiconductors in silk screen printed circuit (※)

	Device	Printed symbol	Terminal name	Circuit
1	Transistor		Collector Base Emitter	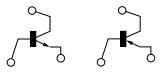
2	Transistor		Collector Base Emitter	
3	Diode		Cathode Anode	
4	Diode		Cathode Anode (NC)	
5	Diode		Cathode Anode (NC)	
6	Diode		Common Anode Cathode	
7	Diode		Common Anode Cathode	
8	Diode		Common Anode Anode	
9	Diode		Common Anode Anode	
0	Diode		Common Cathode Cathode	
!¡	Diode		Common Cathode Cathode	
!™	Diode		Anode Cathode Anode Anode Cathode Anode	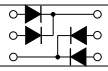
!£	Transistor (FET)		Drain Source Gate	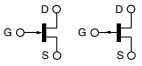
!¢	Transistor (FET)		Drain Source Gate	
!?	Transistor (FET)		□ Source □ Drain □ Gate	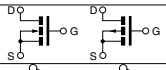
!§	Transistor		□ Emitter □ Collector □ Base	
!¶	Transistor		C2 B1 E1 E2 B2 C1	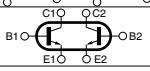
!•	Transistor		C1 B2 E2 E1 B1 C2	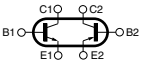
!ª	Transistor		C1 B2 E2 E1 B1 C2	
@º	Transistor		C1 B2 E2 E1 B1 C2	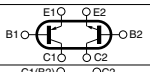
@¡	Transistor		E2 B1 E1 C2 C1(B2)	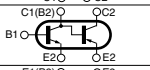
@™	Transistor		(B2) B1 E1 E2 C1 C2	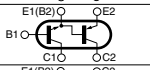
@£	Transistor		(B2) E2 E1 B1 C2 C1	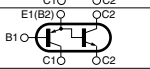
–	Discrete semiconductot			

(Chip semiconductors that are not actually used are included.)

Ver.1.6

3-3. BLOCK DIAGRAM

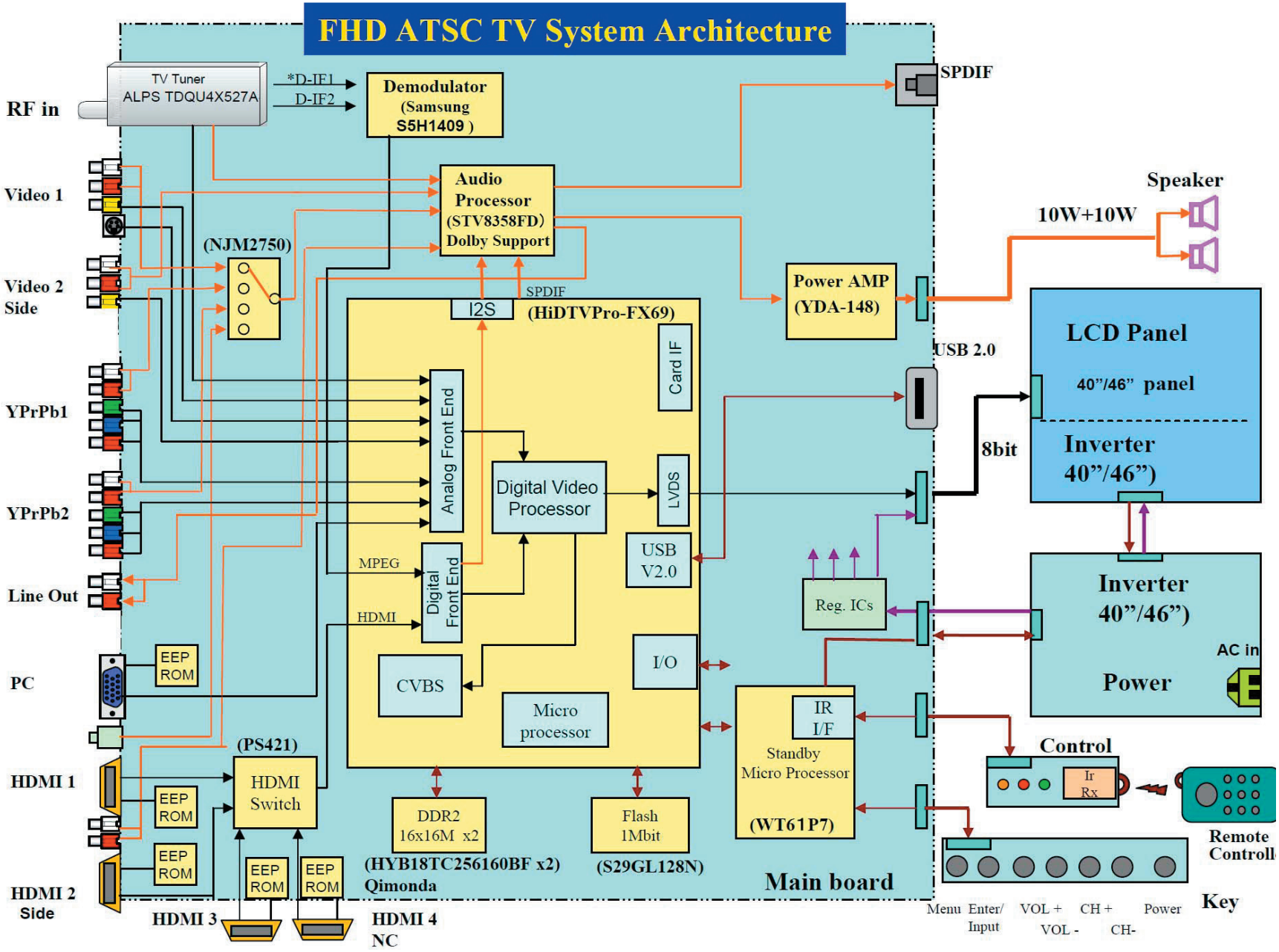

3-4. SCHEMATICS AND SUPPORTING INFORMATION

A BOARD SCHEMATIC DIAGRAM (1 OF 19)

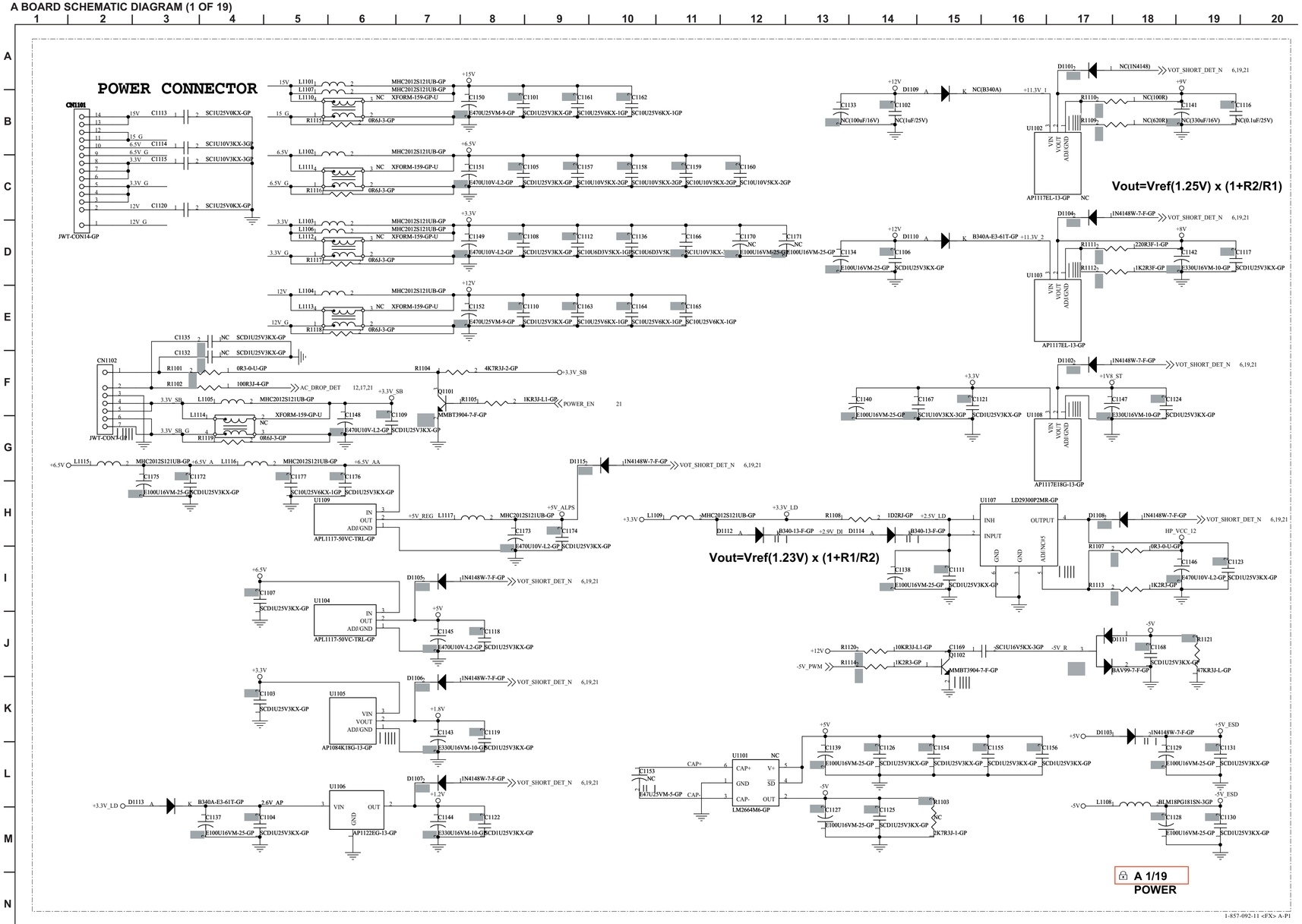

1-857-092-11 <FX> A-P1

A BOARD SCHEMATIC DIAGRAM (2 OF 19)

COMPONENT 1 I/P

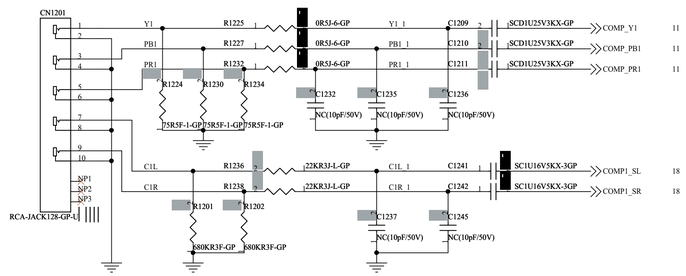

COMPONENT 2 I/P

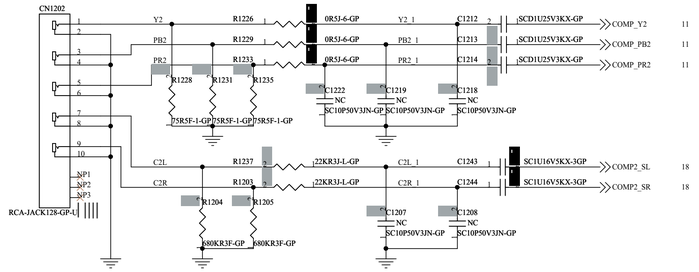

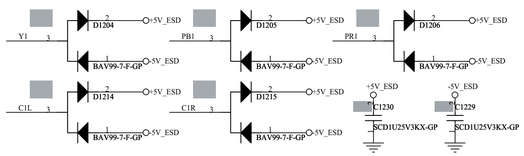

AV1/S-VIDEO1

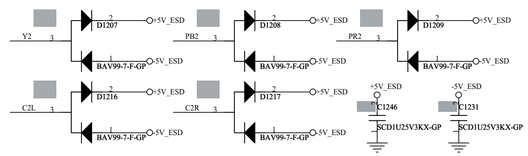

SIDE AV INPUT

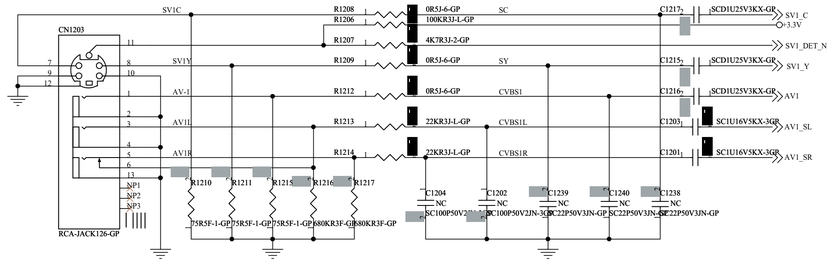

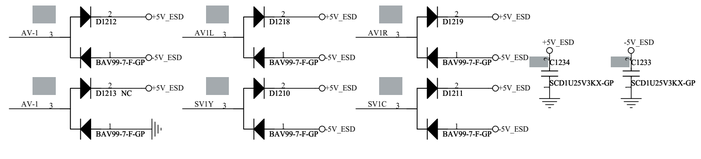

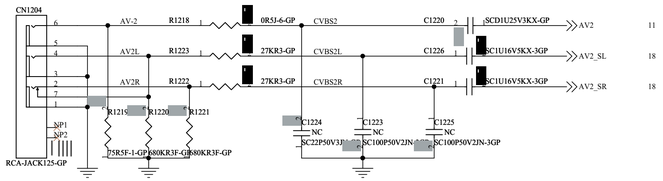

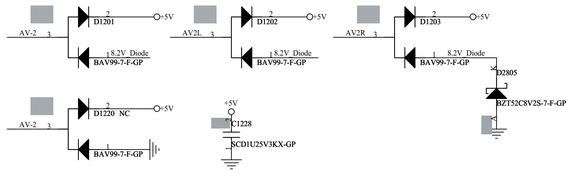

A 2/19
ANALOG INPUT

1-857-092-11 <FX> A-P2

A BOARD SCHEMATIC DIAGRAM (3 OF 19)

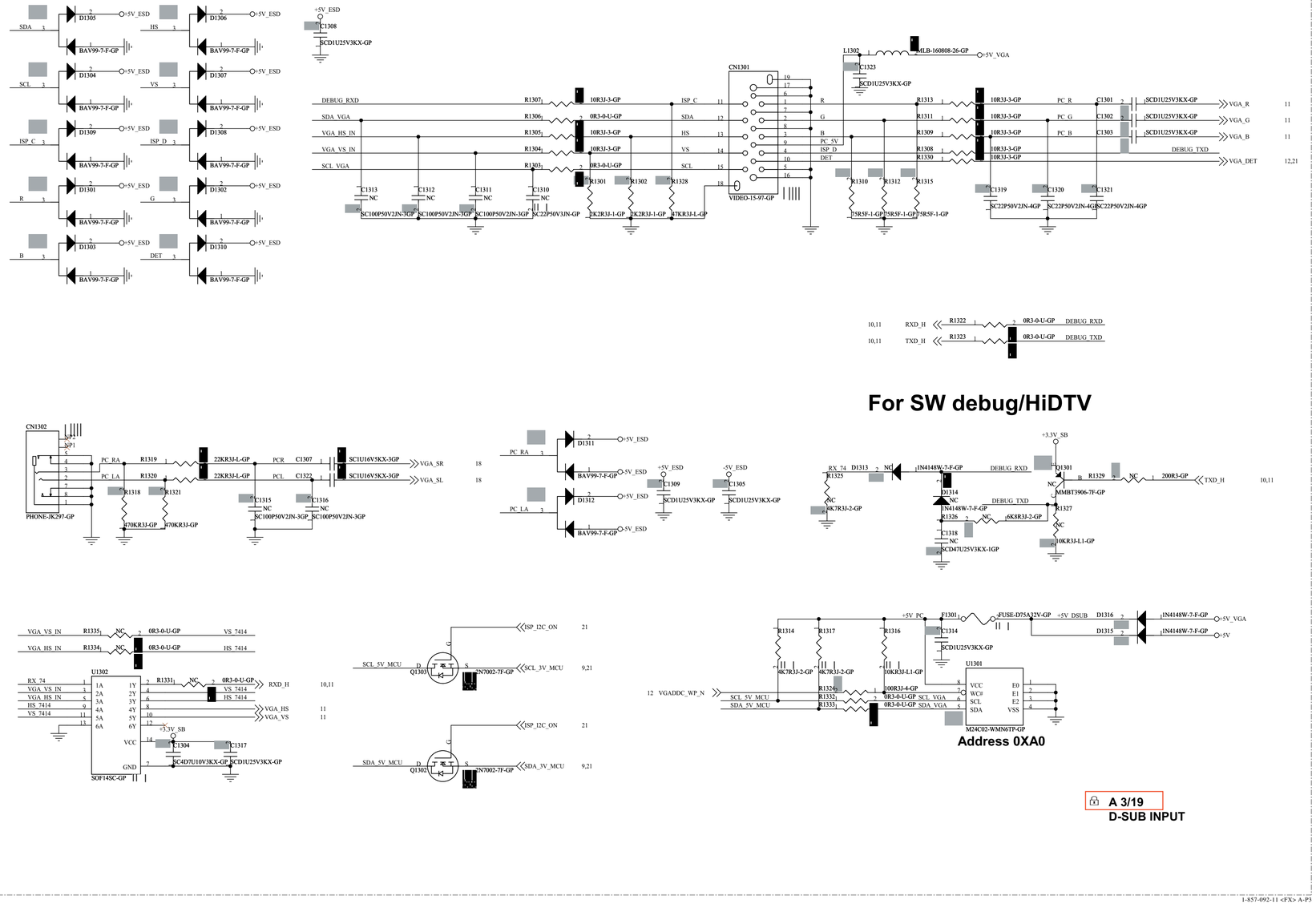

1-857-092-11 <FX> A-P3

A BOARD SCHEMATIC DIAGRAM (4 OF 19)

Device Address Setting(Default 0XC0):

Voltage at adderss selection	Address
(0 - 0.1) x Vcc	0XC0
Open or (0.2 - 0.3) x Vcc	0XC2
(0.4 - 0.6) x Vcc	0XC4
(0.9 - 1) x Vcc	0XC6

Voltage range of Audio control

Control terminal	Control status	Control mode
MODE(22 pin)	H	SAP
	L	STEREO
F_MONO(23 pin)	H	FORCED MONO ON
	L	FORCED MONO OFF

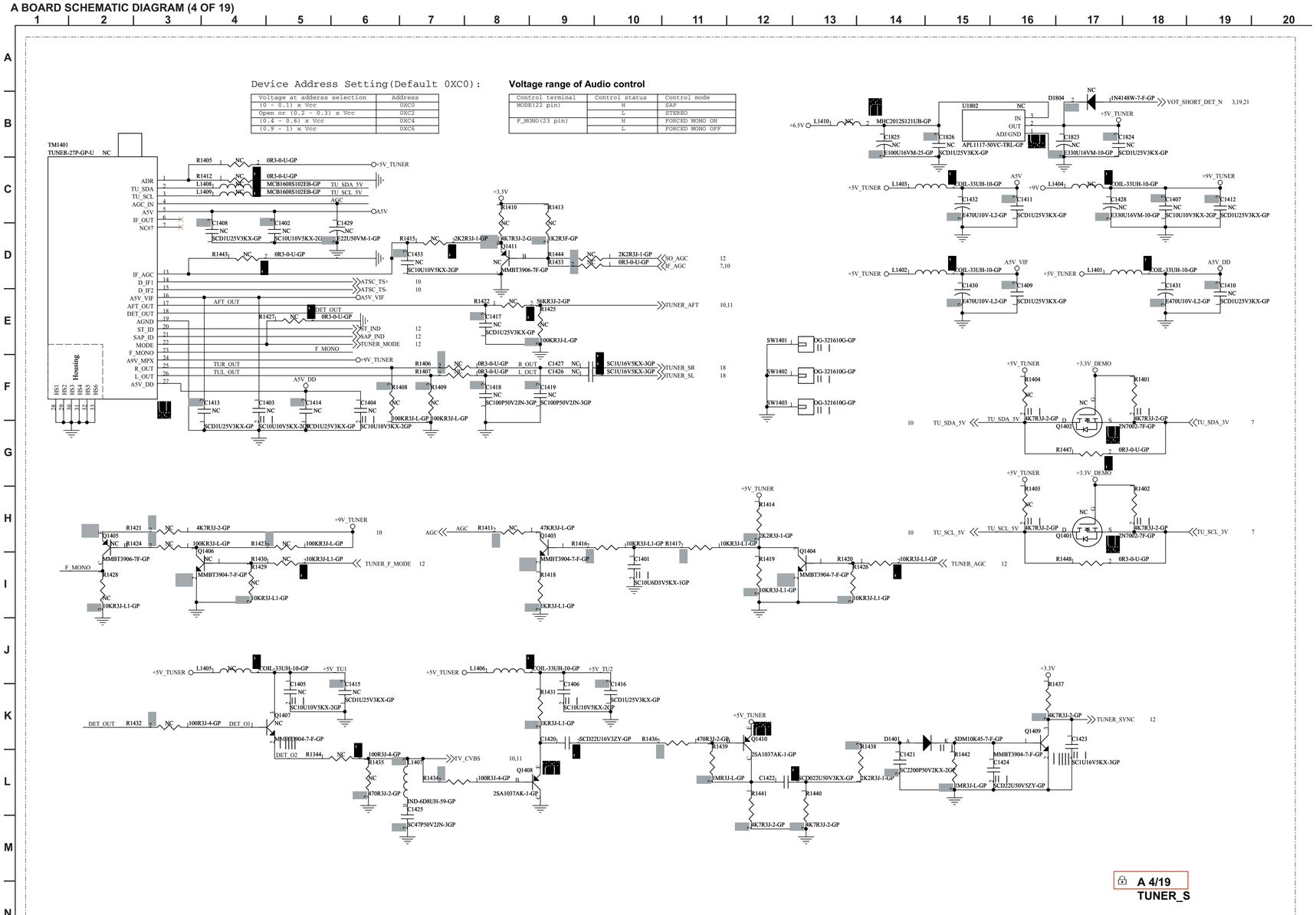

A BOARD SCHEMATIC DIAGRAM (5 OF 19)

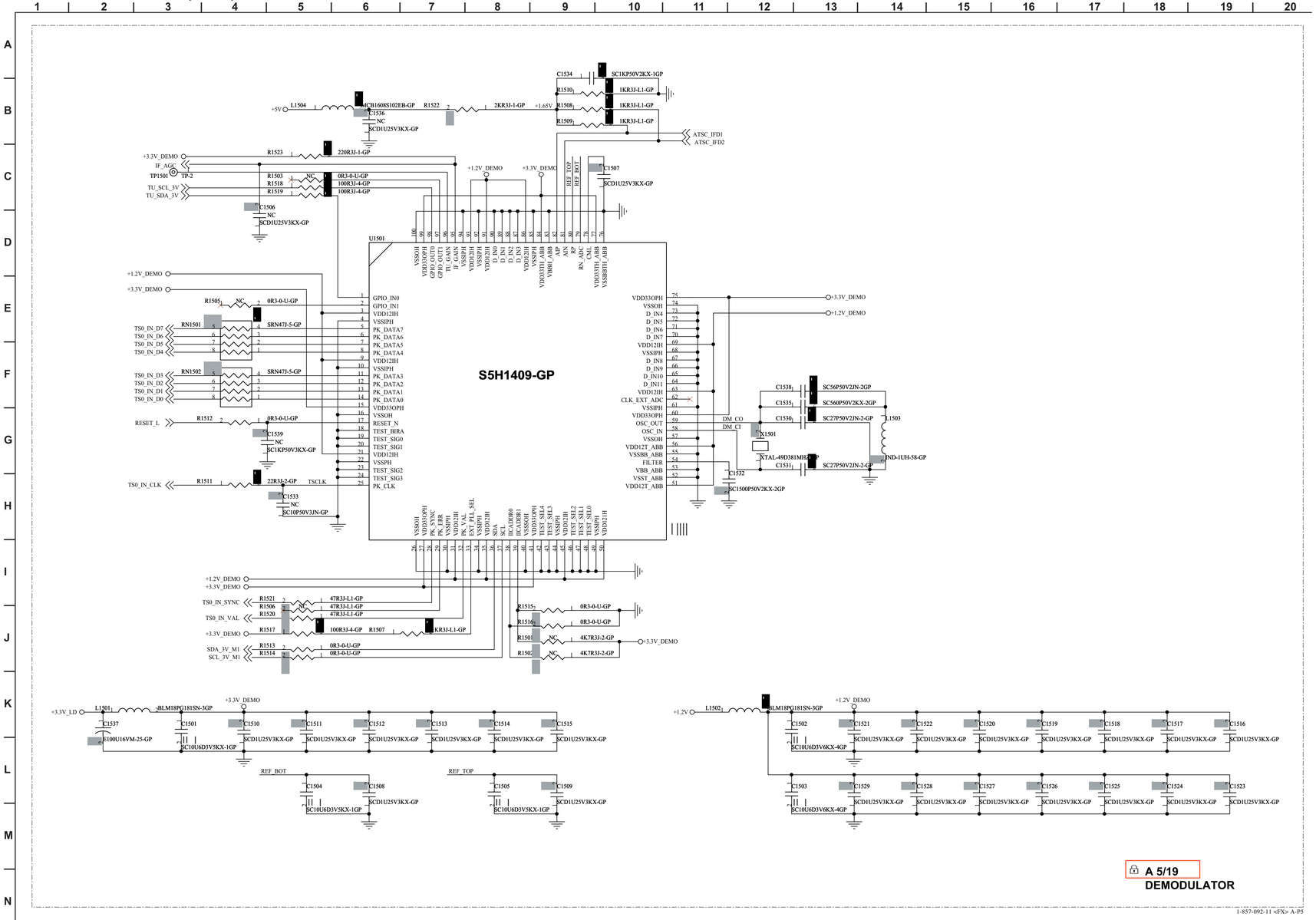

A 5/19
DEMODULATOR

1-857-092-11 <FX> A-P5

A BOARD SCHEMATIC DIAGRAM (6 OF 19)

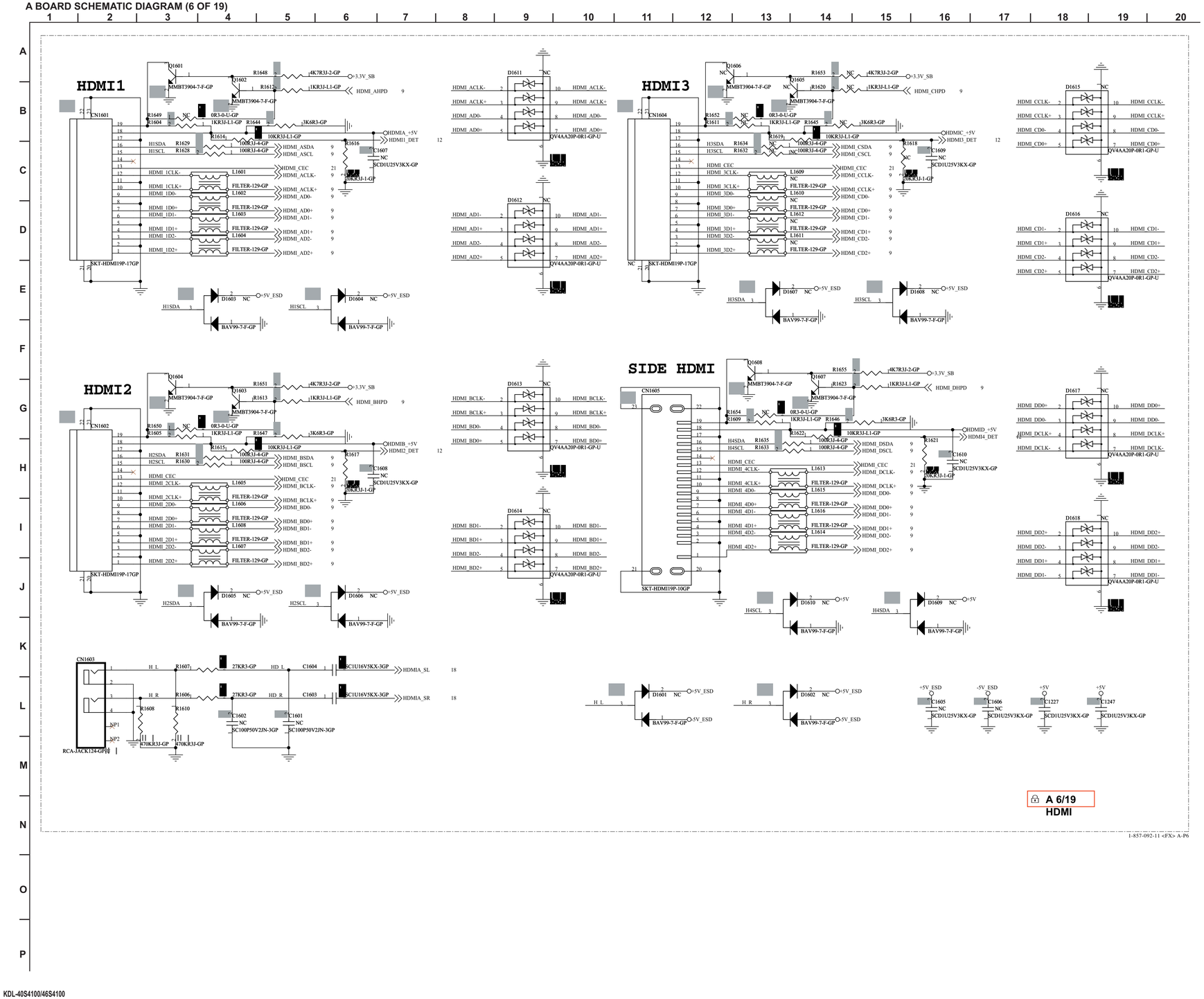

A BOARD SCHEMATIC DIAGRAM (7 OF 19)

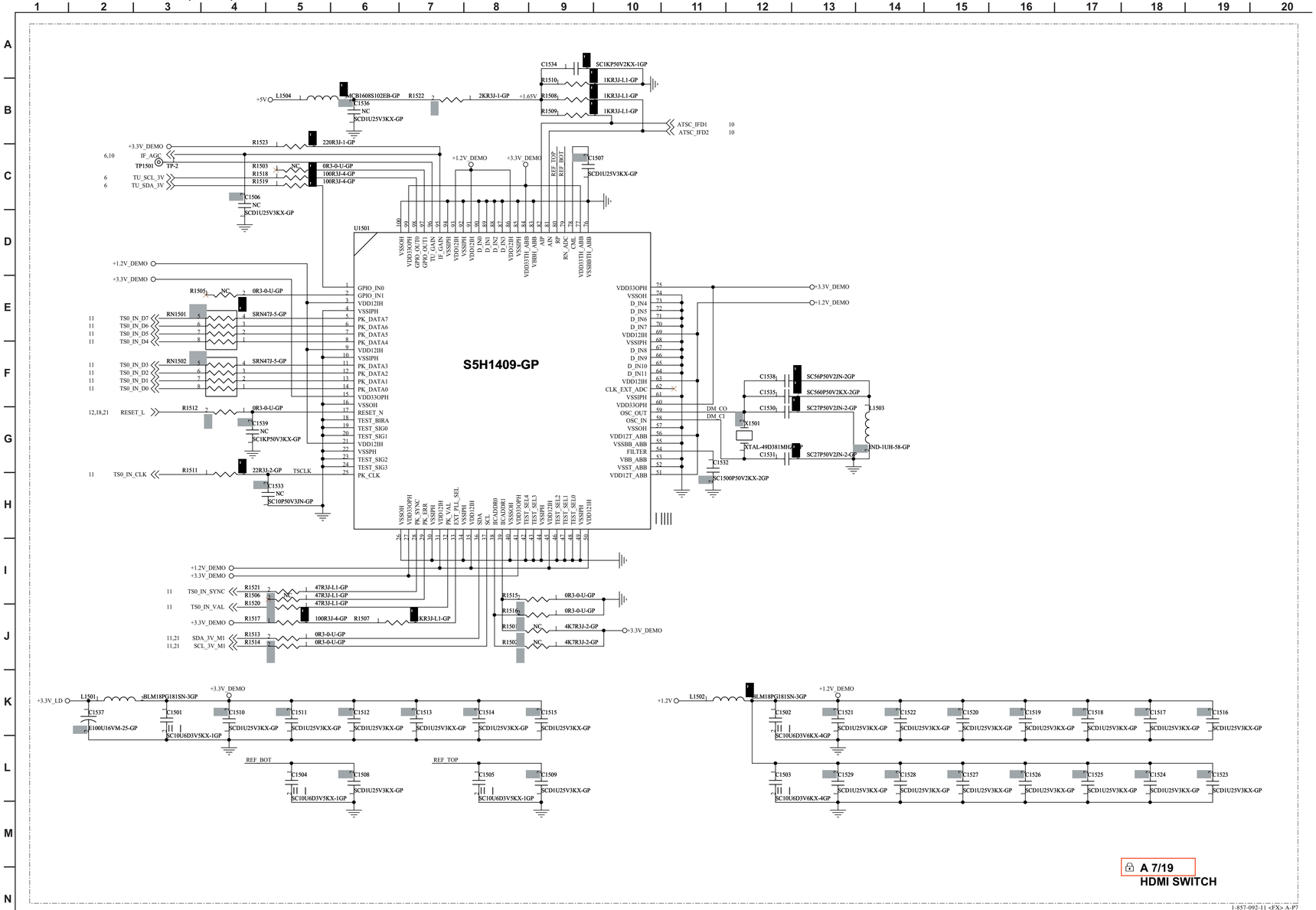

A 7/19
HDMI SWITCH

1-857-092-11 <FX> A-P7

A BOARD SCHEMATIC DIAGRAM (8 OF 19)

USB UPDATE/DEBUG PORT

Close to S5H1409(U1501)

For LVDS

A 8/19
TUNER ALPS & USB

1-857-092-11 <FX> A-P8

A BOARD SCHEMATIC DIAGRAM (9 OF 19)

HiDTV-Pro_CX

(1/4)

TS_ IN
HDM I_IN
ANALOG_ IN
LVDS_OUT
I2S PORT
I2C PORT
UART PORT
USB PORT
ADC
M1SC

U1901A

HIDTV-PRO-FX69-GP

A 9/19
HIDTV PRO

1-857-092-11 <FX> A-P9

A BOARD SCHEMATIC DIAGRAM (10 OF 19)

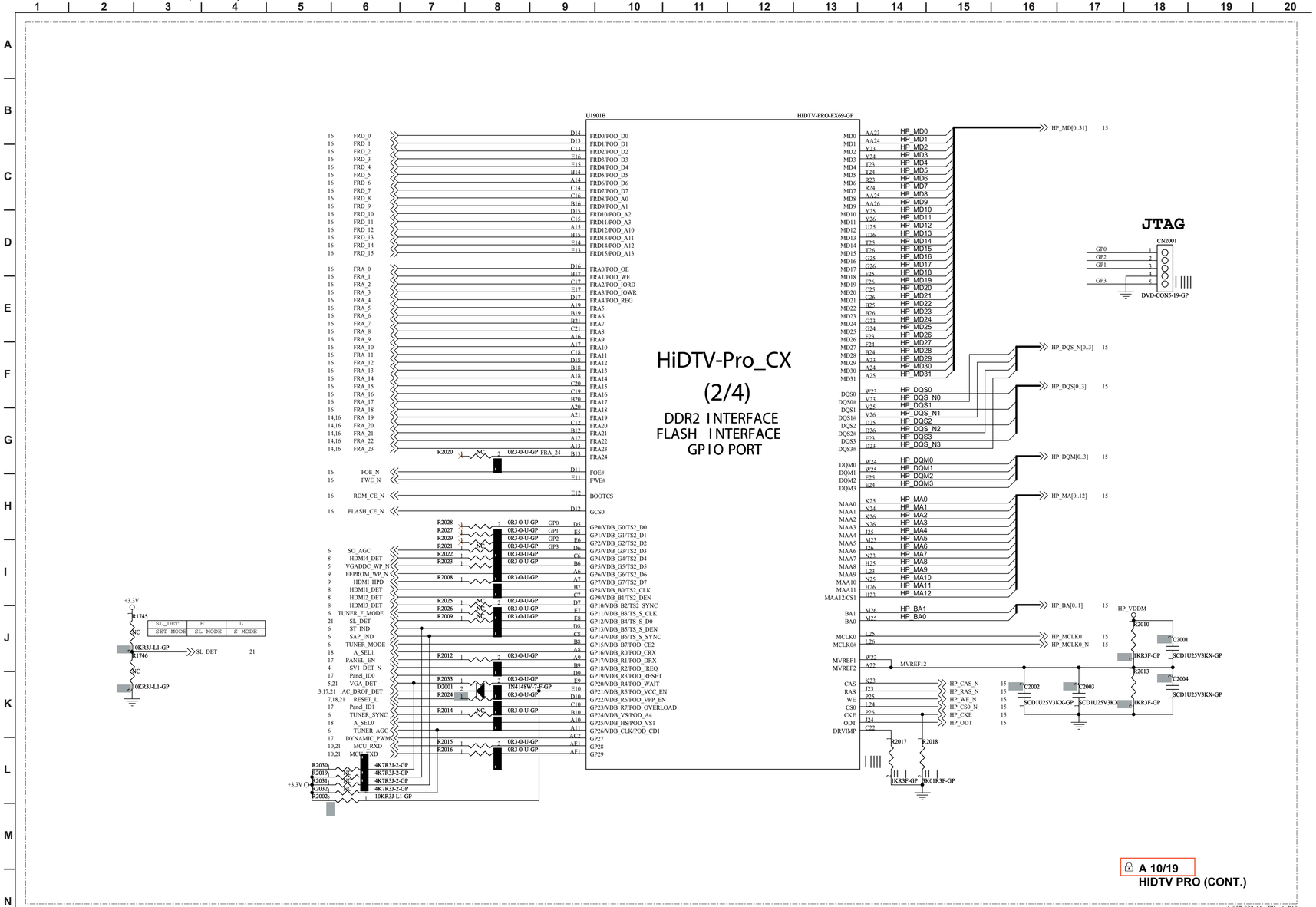

1-857-092-11 <FX> A-P10

A BOARD SCHEMATIC DIAGRAM (11 OF 19)

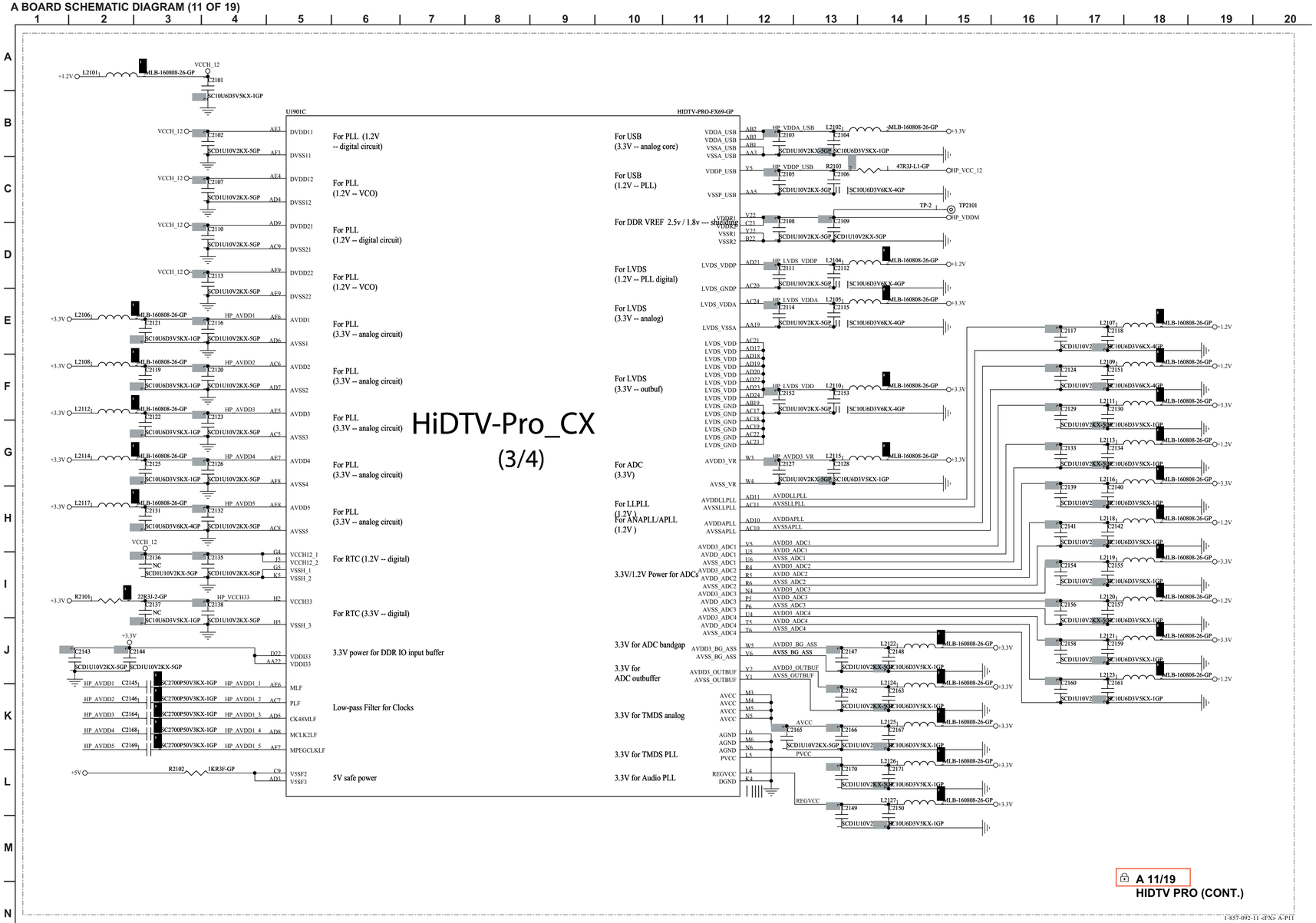

A BOARD SCHEMATIC DIAGRAM (12 OF 19)

HIDTV_PRO POWER

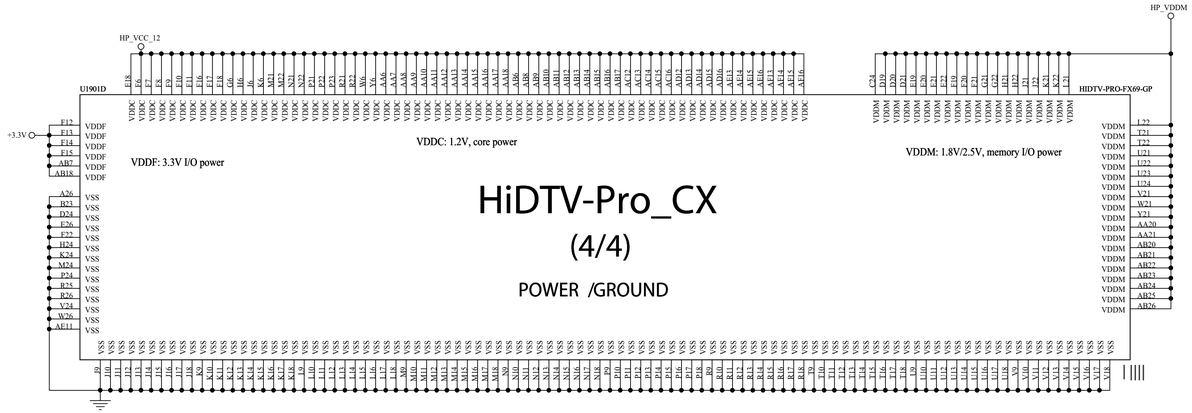

HiDTV-Pro_CX

(4/4)

POWER /GROUND

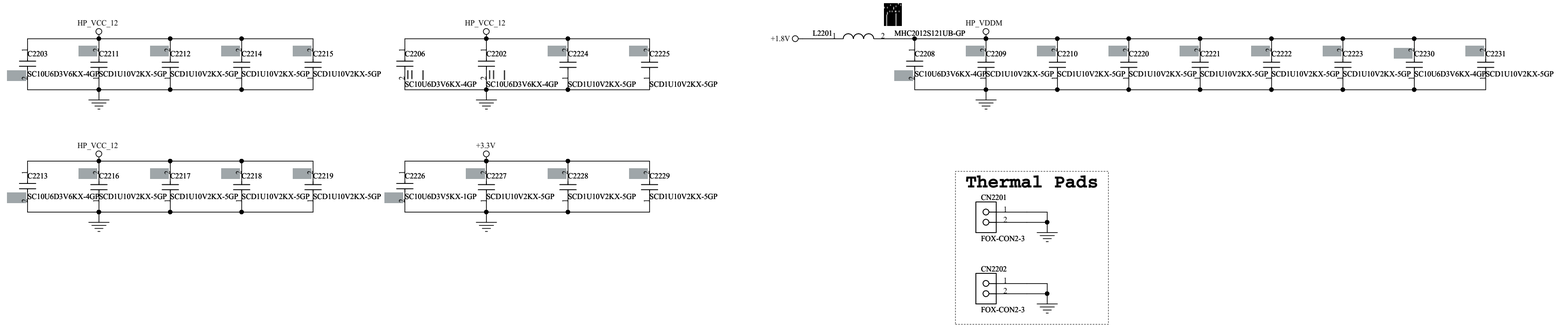

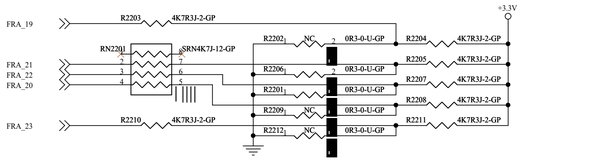

Thermal Pads

A 12/19
HIDTV PRO (CONT.)

A BOARD SCHEMATIC DIAGRAM (13 OF 19)

DDR MEMORY

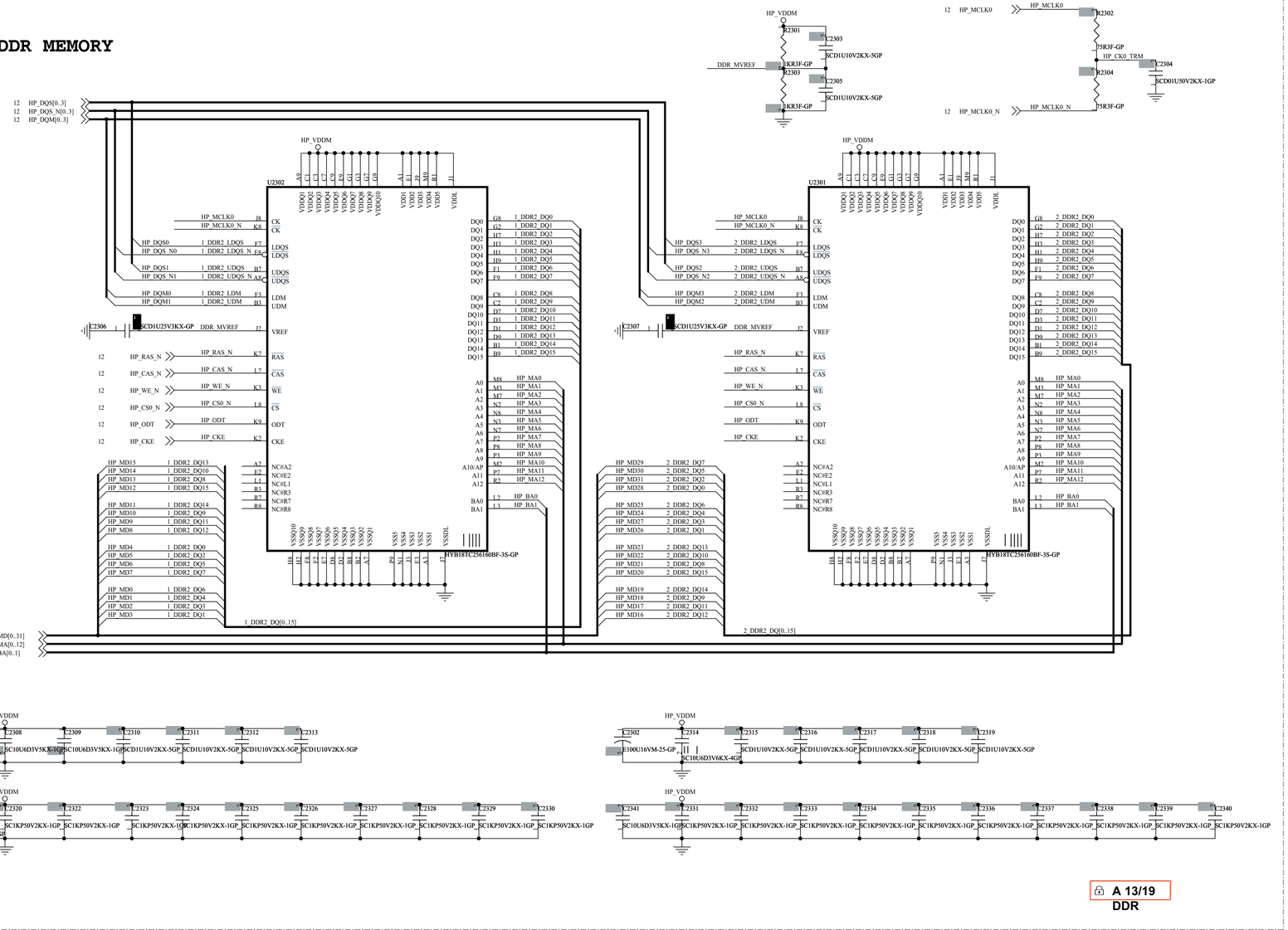

A 13/19
DDR

1-857-092-11 <FX> A-P13

A BOARD SCHEMATIC DIAGRAM (14 OF 19)

BOOT ROM & FLASH

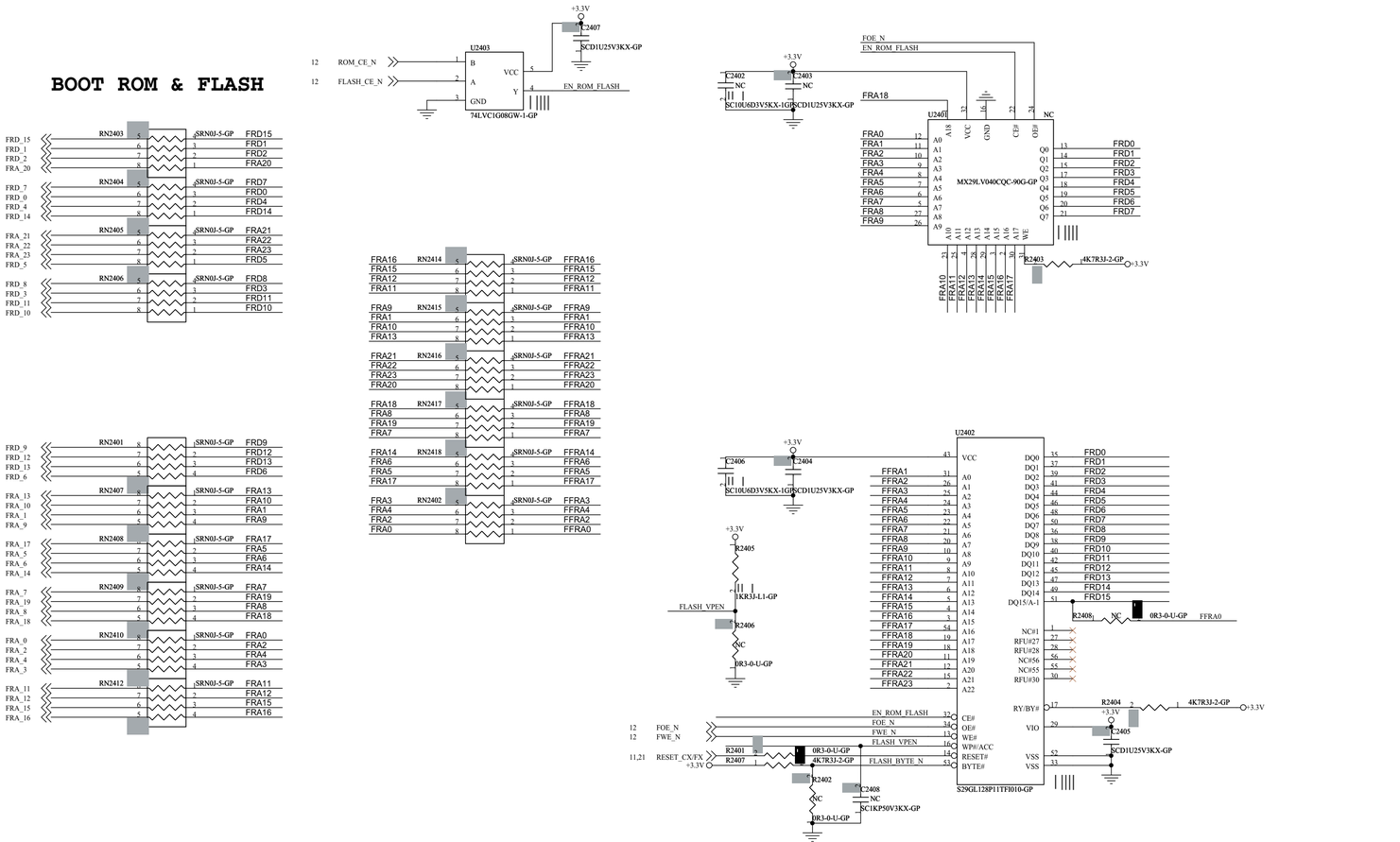

A 14/19
BOOT ROM & FLASH

1-857-092-11 <FX> A-P14

A BOARD SCHEMATIC DIAGRAM (15 OF 19)

LVDS INTERFACE

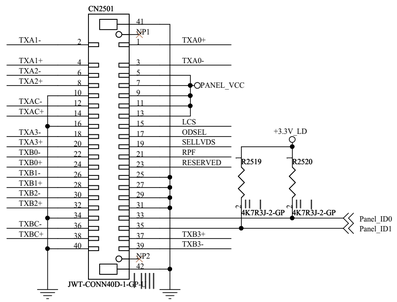

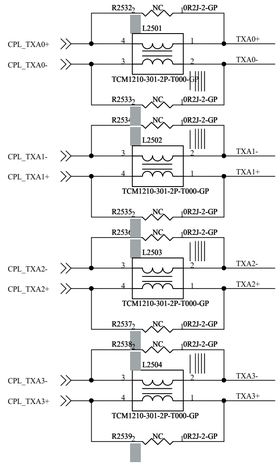

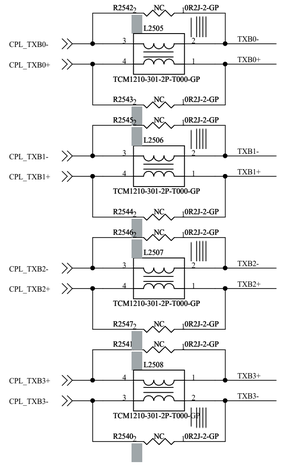

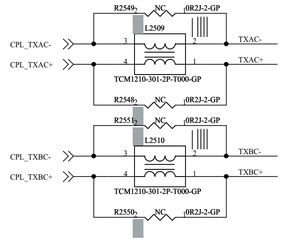

27MHZ CLOCK TO HIDTV_PRO

(The R, C values in the LPF need be fine tuned)

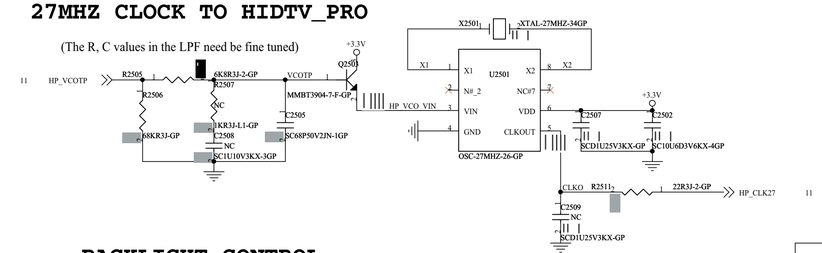

LVDS MODULE POWER CONTROL

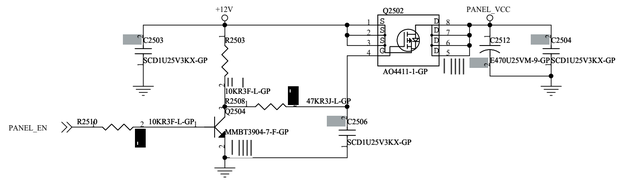

BACKLIGHT CONTROL

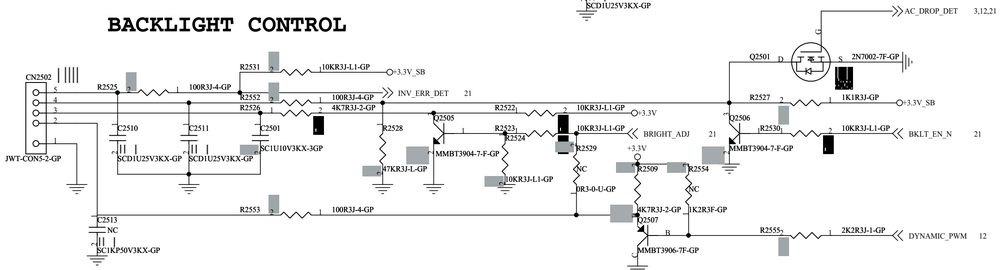

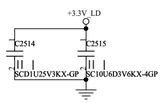

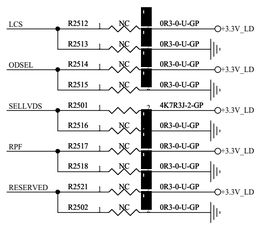

A 15/19
LVDS INTERFACE

1-857-092-11 <PX> A-P13

A BOARD SCHEMATIC DIAGRAM (16 OF 19)

AUDIO PROCESSOR

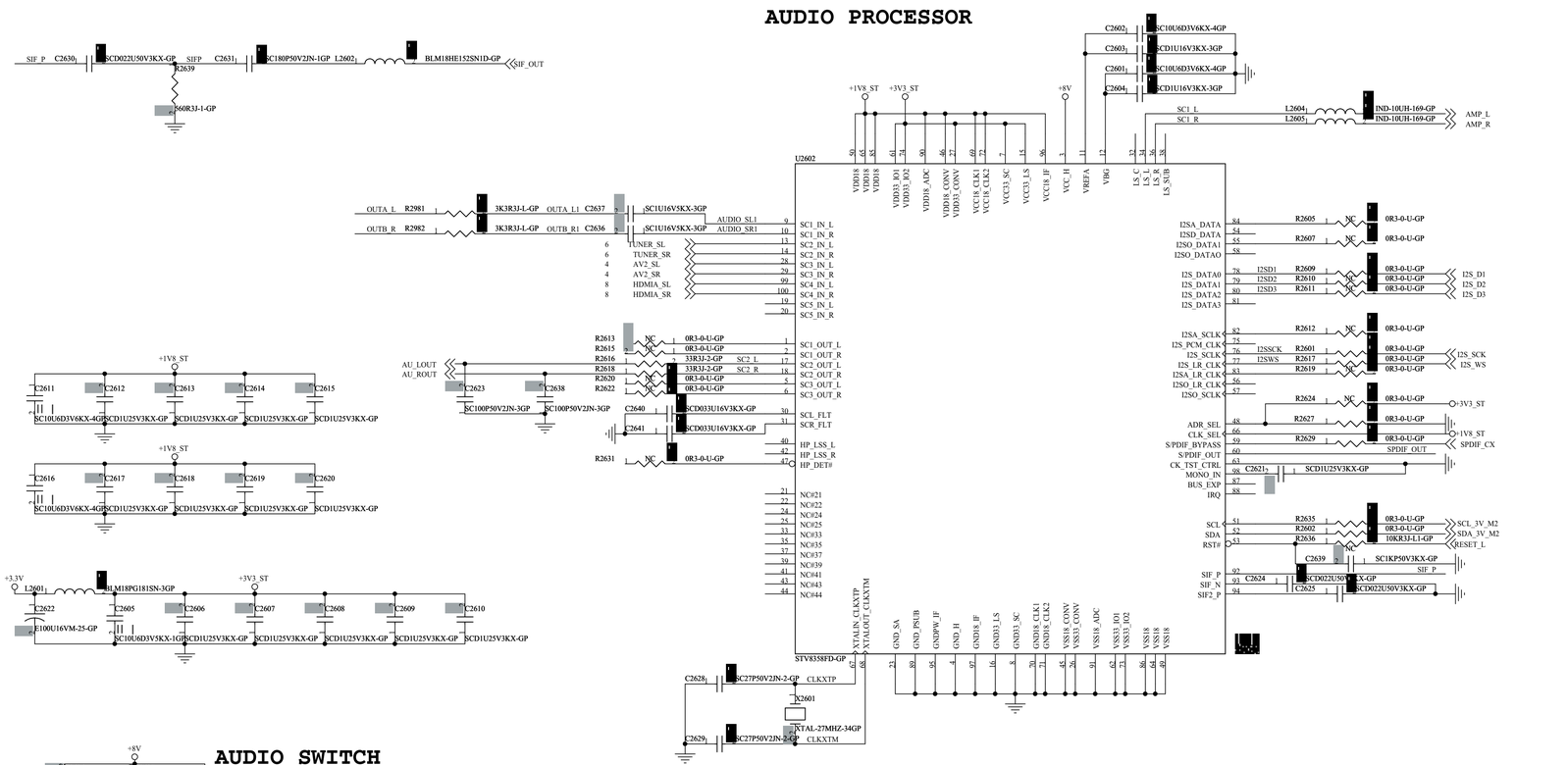

1-857-092-11 <FX> A-P16

A BOARD SCHEMATIC DIAGRAM (17 OF 19)

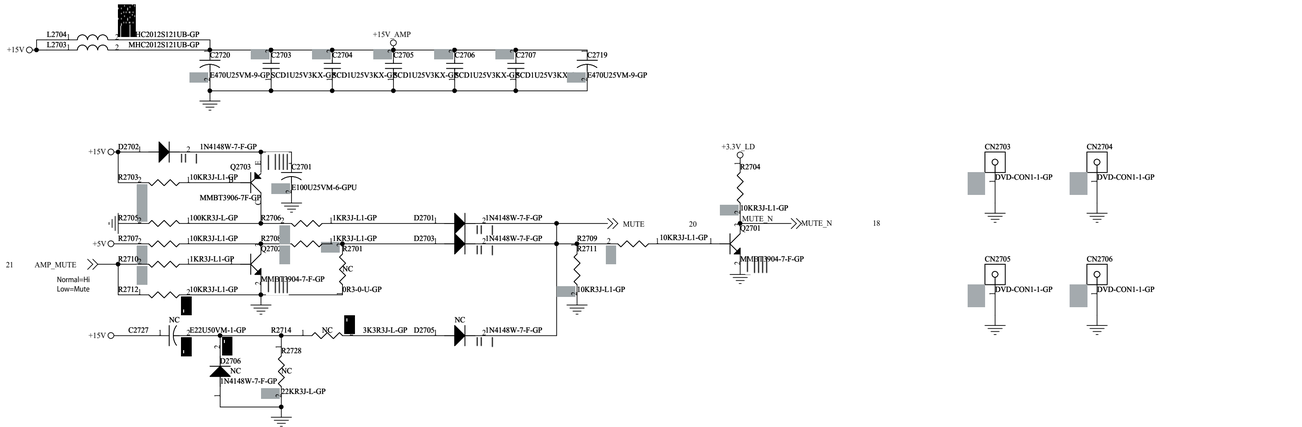

A 17/19
AUDIO AMP

1-857-092-11 <FX> A-P17

A BOARD SCHEMATIC DIAGRAM (18 OF 19)

AUDIO OUTPUT STAGE & MUTE CONTROL

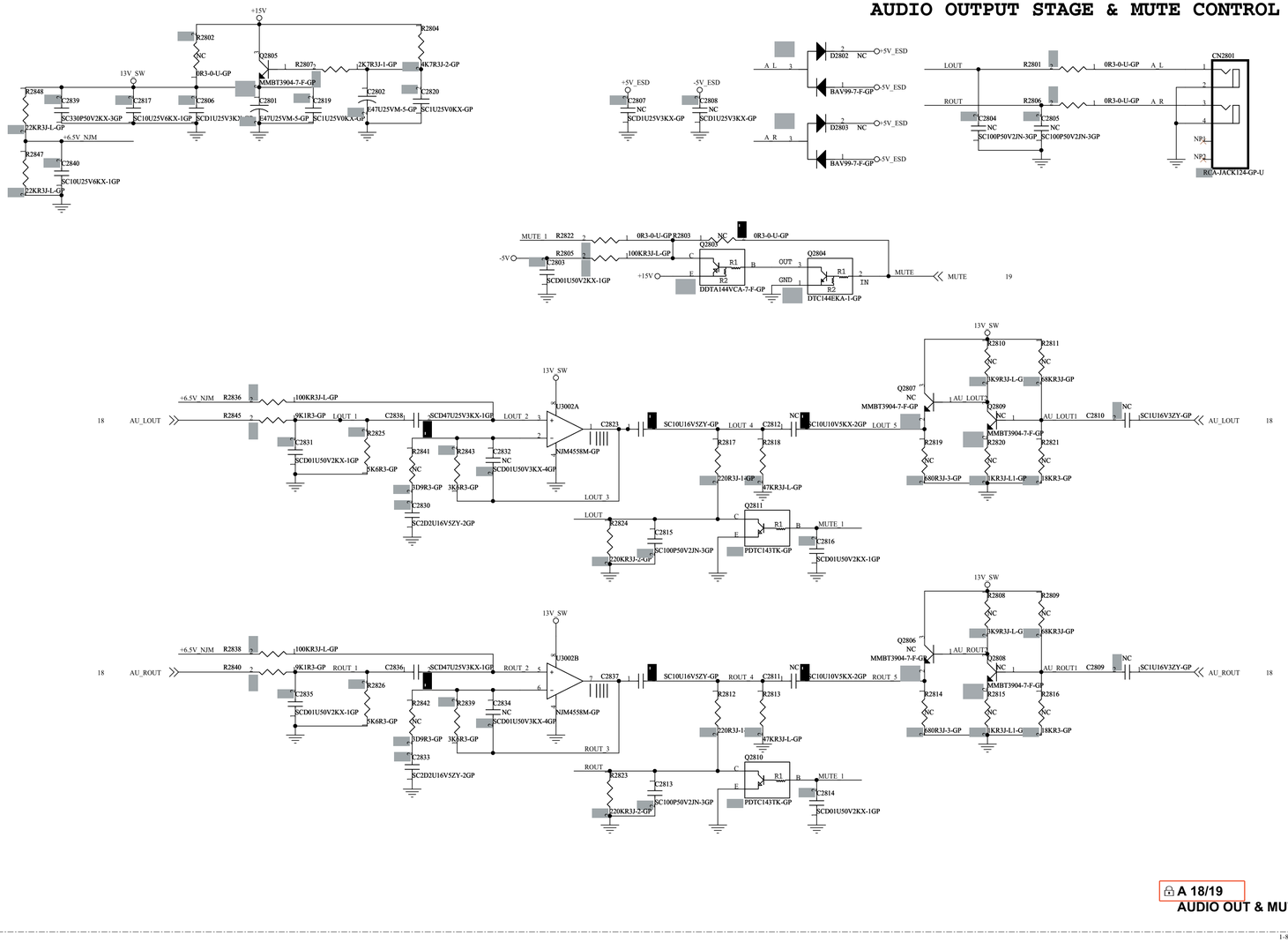

A 18/19
AUDIO OUT & MUTE

A BOARD SCHEMATIC DIAGRAM (19 OF 19)

KEYPAD

CN2902 — JWT-CON6-4-GP

R2983 0R3-0-U-GP — POWER_Key
R2924 100R3J-4-GP — ADC_IN2
R2926 100R3J-4-GP — ADC_IN1
R2975 100R3J-4-GP — +3.3V_SB

C2904 NC — SCD1U25V3KX-GP
C2905 NC — SCD1U25V3KX-GP
C2906 NC — SCD1U25V3KX-GP
C2907 NC — SC10U6D3V5KX-1GP
C2908 NC — SCD1U25V3KX-GP

R2908 10KR3J-L1-GP
R2909 10KR3J-L1-GP

+3.3V_SB

C2927 E100U16VM-25-GP
C2925 SCD1U25V3KX-GP

R2958 4K7R3J-2-GP
R2959 4K7R3J-2-GP
R2960 10KR3J-L1-GP
R2976 4K7R3J-2-GP

U2901 AT24C32CN-SH-T-GP
VCC A0 1
WP A1 2
SCL A2 3
SDA GND 4
8 VCC
7 WP
6 SCL
5 SDA

MCU_WP
SCL_3V_MCU
SDA_3V_MCU

Address 0XA2

+3.3V_SB

C2903 SCD1U25V3KX-GP
C2923 E100U16VM-25-GP

U2903 61P7-RN440WT-GP

R2902 NC — 4K7R3J-2-GP
R2903 NC — 4K7R3J-2-GP
R2904 NC — 4K7R3J-2-GP

SDA_3V_MCU — R2910 — 100R3J-4-GP — SDA_ISP — 20 DSDA1
SCL_3V_MCU — R2912 — 100R3J-4-GP — SCL_ISP — 21 DSCL1
11 IR_EN — R2914 — 0R3-0-U-GP — 22 GPIOA5/DSDA2
R2916 NC — 0R3-0-U-GP — 23 GPIOA4/DSCL2
17 INV_ERR_DET — R2918 — 100R3J-4-GP — 24 GPIOA3/P03
11,16 RESET_CX/FX — R2919 — 100R3J-4-GP — 25 GPIOA2/P02
R2921 NC — 0R3-0-U-GP — 26 GPIOA1/P01
5,12 VGA_DET — R2922 NC — 0R3-0-U-GP — 27 GPIOA0/P00

19 AMP_MUTE — R2928 — 100R3J-4-GP — 5 GPIOB6/SSDA
3,12,17 AC_DROP_DET — R2929 — 100R3J-4-GP — 6 GPIOB5/SSCL
IR_DET — R2930 — 100R3J-4-GP — 7 GPIOB4/P05
8 HDMI_CEC — R2931 — 100R3J-4-GP — 8 GPIOB3/P04
VOT_SHORT_DET_MCU_N — R2933 — 100R3J-4-GP — 9 GPIOB2/IR
10 GPIOB1/IRQ3
11 GPIOB0/IRQ2

R2937 NC — 4K7R3J-2-GP
+3.3V_SB — R2939 — 4K7R3J-2-GP
+3.3V — R2941 — 4K7R3J-2-GP

C2909 SC20P50V2JN-1GP — X2901 — C2910 SC20P50V2JN-1GP
WTOSC0 — 3 OSCO
WTOSC1 — 4 OSCI

+3.3V_SB — R2947 10KR3J-L1-GP — C2912 SC10U6D3V5KX-1GP — 43 NRST

VDD33V — GND

GPIOC7/P17/IRQ1 — 12 — POWER_Key
GPIOC6/P16/IRQ0 — 13 — MCU_IRQ
GPIOC5/P15/TXD1 — 14 — TXD1
GPIOC4/P14/RXD1 — 15 — RXD1
GPIOC3/AD3 — 16 — POWER — POWER_EN 3
GPIOC2/AD2 — 17 — ADC_IN1
GPIOC1/AD1 — 18 — ADC_IN2
GPIOC0/AD0 — 19 — R2923 NC — 0R3-0-U-GP — RESET_L 7,12,18

R2927 10KR3J-L1-GP
R2925 10KR3J-L1-GP — +3.3V_SB

GPIOD7/RXD2 — 28 — MCU_RXD 10,12
GPIOD6/TXD2 — 29 — MCU_TXD 10,12
GPIOD5/P13 — 30 — +3.3V_SB
GPIOD4/P12 — 31 — ISP_I2C_ON 5
GPIOD3/P11 — 32
GPIOD2/P10 — 33
GPIOD1/HIN2 — 34
GPIOD0/HIN1 — 35

R2977 4K7R3J-2-GP
R2932 0R3-0-U-GP
R2934 100R3J-4-GP — LED_GREEN_POWER
R2935 100R3J-4-GP — LED_RED(STANDBY)
R2938 100R3J-4-GP — LED_Green(PIC-OFF)
R2940 100R3J-4-GP — LED_Amber(SLEEP)

R2964 4K7R3J-2-GP
R2965 4K7R3J-2-GP — +3.3V_SB
R2917 4K7R3J-2-GP
R2943 100R3J-4-GP — MCU_WP

GPIOE0 — 44
GPIOE1/PWM0 — 47 — R2901 0R3-0-U-GP — VCCH_RST 11
GPIOE2/PWM1 — 41 — R2945 0R3-0-U-GP — -5V_PWM 3
GPIOE3/LPWM — 40 — R2969 0R3-0-U-GP — BRIGHT_ADJ 17
GPIOE4/P06 — 39 — R2968 0R3-0-U-GP — BKLT_EN_N 17
GPIOE5/P07 — 38 — R2920 0R3-0-U-GP — SL_DET 12
GPIOE6/VIN2 — 37 — R2970 0R3-0-U-GP — SCL_3V_MCU
GPIOE7/VIN1 — 36 — R2971 0R3-0-U-GP — SDA_3V_MCU

C2902 SC1U10V3KX-3GP

R2907 4K7R3J-2-GP
R2980 4K7R3J-2-GP — +3.3V_SB
R2915 4K7R3J-2-GP

R2978 0R3-0-U-GP — TXD1
R2979 0R3-0-U-GP — RXD1

CN2901 DVD-CON4-23-GP 21.60851.104
1 +3.3V_SB
2 SCL_ISP
3 SDA_ISP
4

CN2904 DVD-CON3-13-GP
TXD1 1
RXD1 2
3

+1.2V — R2989 4K7R3J-2-GP
+3.3V_SB — R2984 100KR3J-L-GP
3,6,19 VOT_SHORT_DET_N — Q2907 MMBT3904-7-F-GP — VOT_SHORT_DET_MCU_N
R2991 1KR3J-L1-GP — R2990 K8R3-GP — +3.3V
R2992 1KR3J-L1-GP

IR&LED

CN2903 — JWT-CON9-GP

R2936 68R3J-GP — Q2902 MMBT3906-7-GP — R2966 4K7R3J-2-GP — R2942 4K7R3J-2-GP — LED_GREEN_POWER
R2944 68R3J-GP — Q2903 MMBT3906-7-GP — R2967 4K7R3J-2-GP — R2946 4K7R3J-2-GP — LED_RED(STANDBY)
R2948 68R3J-GP — Q2904 MMBT3906-7-GP — R2973 4K7R3J-2-GP — R2949 4K7R3J-2-GP — LED_Amber(SLEEP)
R2950 68R3J-GP — Q2905 MMBT3906-7-GP — R2974 4K7R3J-2-GP — R2951 4K7R3J-2-GP — LED_Green(PIC-OFF)
all → +3.3V_SB

+3.3V_SB_IR — L2901 MLB-201209-21-GP — +3.3V_SB
IR — R2952 47R3J-L1-GP — IR_DET — IR_DET 11

C2917 NC — SCD1U25V3KX-GP
C2918 NC — SCD1U25V3KX-GP
C2919 NC — SCD1U25V3KX-GP
C2920 NC — SCD1U25V3KX-GP
C2921 NC — SCD1U25V3KX-GP
C2922 NC — SC10U6D3V5KX-1GP
C2926 SC100P50V2DN-3GP

+3.3V_SB

C2929 SCD1U25V3KX-GP
C2939 SC10U6D3V5KX-1GP
R2985 2K7R3J-1-GP — MCU_IRQ

U2904 XC6108C30AMRN-GP
VSEN — VIN
VOUT — R2913 100R3J-4-GP
Cd — VSS

+3.3V — R2993 4K7R3J-2-GP — C2928 SCD1U25V3KX-GP
C2911 SCD47U25V3KX-1GP

+6.5V — R2954 5K6R3-GP — R2956 10KR3J-L1-GP — C2924 SCD1U25V3KX-GP

U2902 XC6108C30AMRN-GP
VSEN — VIN
VOUT — R2955 3R3J-2-GP
Cd — VSS

C2915 SCD1U25V3KX-GP
C2916 SC10U6D3V5KX-1GP
R2953 2K7R3J-1-GP — VOL_DROP_DET_N
C2901 SCD47U25V3KX-1GP

7,11 SCL_3V_M1 — Q2906 2N7002-7F-GP — SCL_3V_MCU 5,9
R2957 4K7R3J-2-GP — POWER_EN 3
R2962 NC — 0R3-0-U-GP

7,11 SDA_3V_M1 — Q2901 2N7002-7F-GP — SDA_3V_MCU 5,9
R2961 4K7R3J-2-GP — POWER_EN 3
R2963 NC — 0R3-0-U-GP

+3.3V — C2931 SC10U6D3V5KX-1GP — C2932 SC10U6D3V6KX-4GP — C2933 SC10U6D3V5KX-1GP
+3.3V_SB — C2930 SC10U6D3V5KX-1GP — C2936 SCD1U25V3KX-GP
+3.3V — C2934 SCD1U25V3KX-GP — C2935 SCD1U25V3KX-GP — C2937 SCD1U25V3KX-GP — C2938 SCD1U25V3KX-GP

A 19/19
MCU

A

[POWER, ANALOG INPUT, D-SUB INPUT, TUNER_S, DEMODULATOR, HDMI, HDMI SWITCH, TUNER ALPS & USB, HIDTV PRO, DDR, BOOT ROM & FLASH, LVDS INTERFACE, AUDIO PROCESSOR, AUDIO AMP, AUDIO OUT & MUTE, MCU]

COMPONENT SIDE

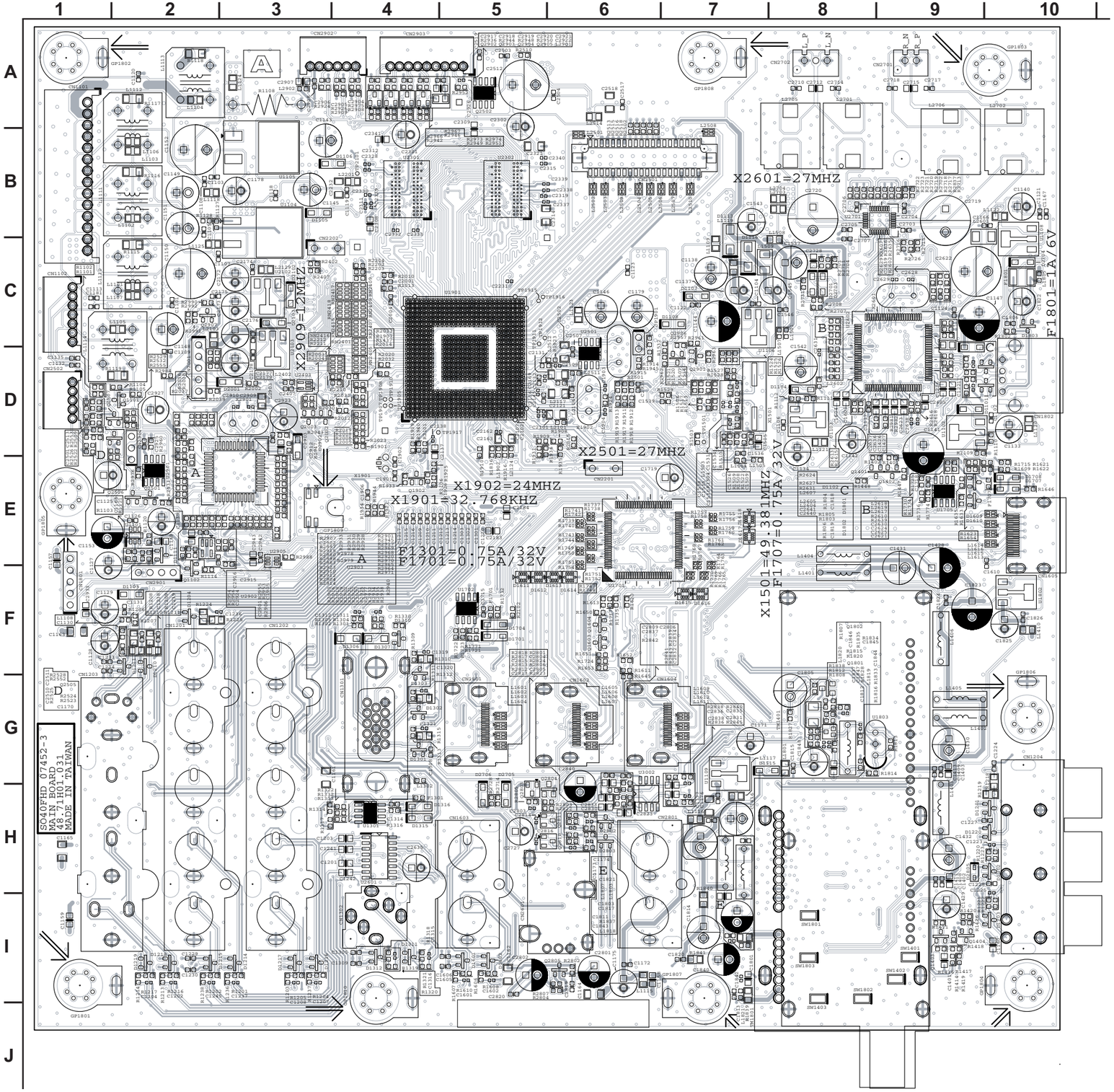

A

[POWER, ANALOG INPUT, D-SUB INPUT, TUNER_S, DEMODULATOR, HDMI, HDMI SWITCH, TUNER ALPS & USB, HIDTV PRO, DDR, BOOT ROM & FLASH, LVDS INTERFACE, AUDIO PROCESSOR, AUDIO AMP, AUDIO OUT & MUTE, MCU]

CONDUCTOR SIDE

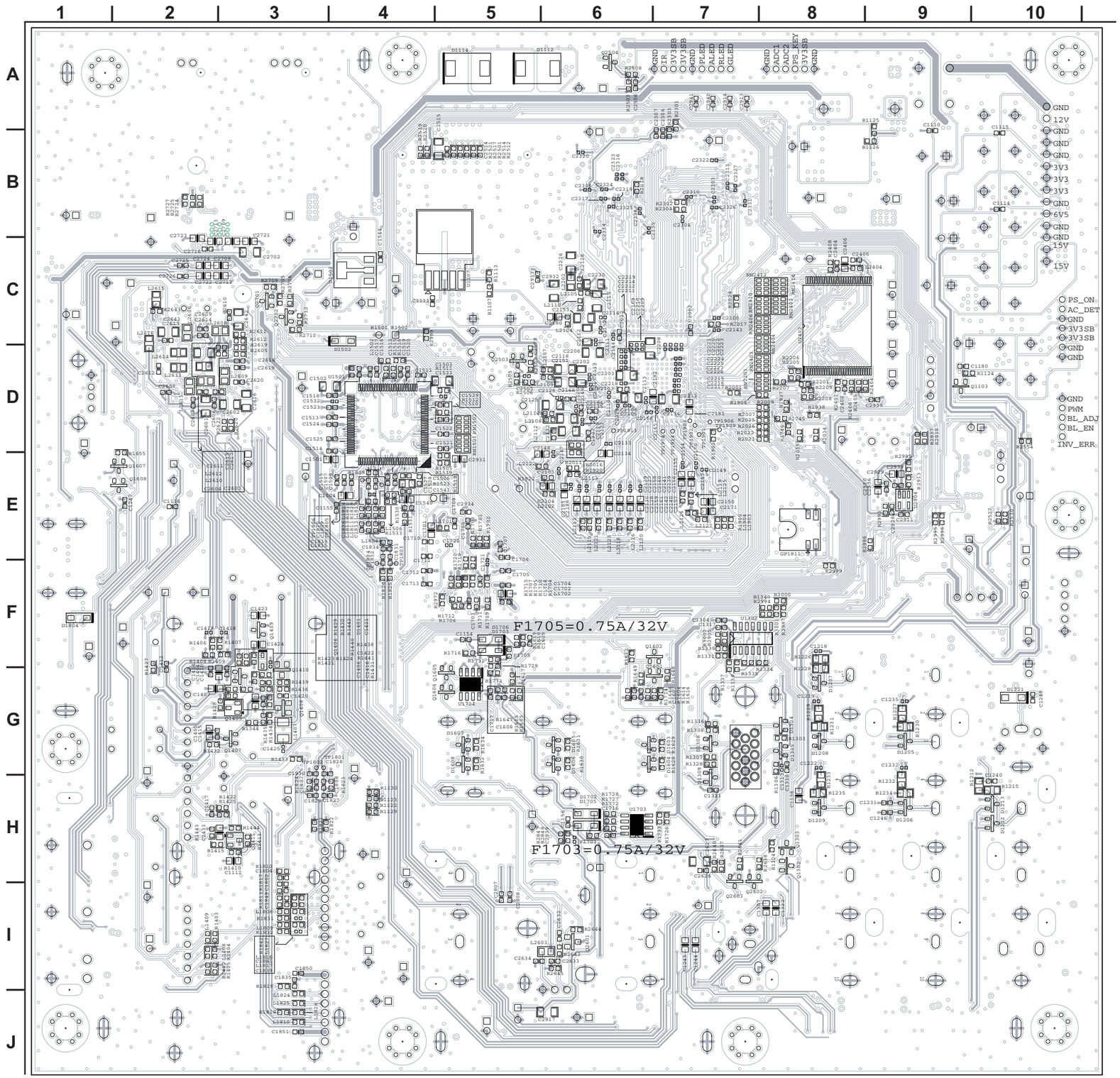

G BOARD SCHEMATIC DIAGRAM (1 OF 3)

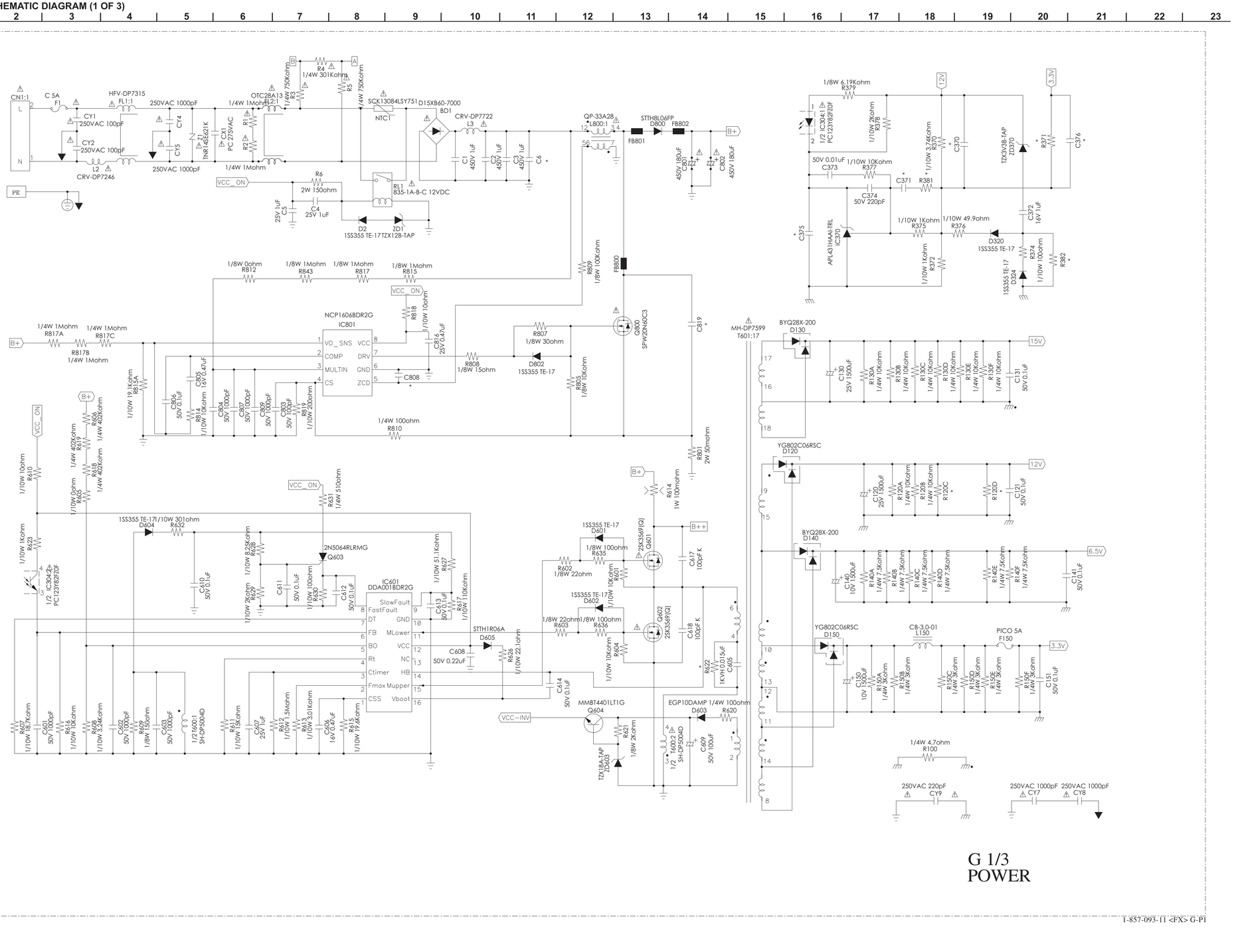

G 1/3
POWER

T-857-093-11 <FX> G-P1

G BOARD SCHEMATIC DIAGRAM (2 OF 3)

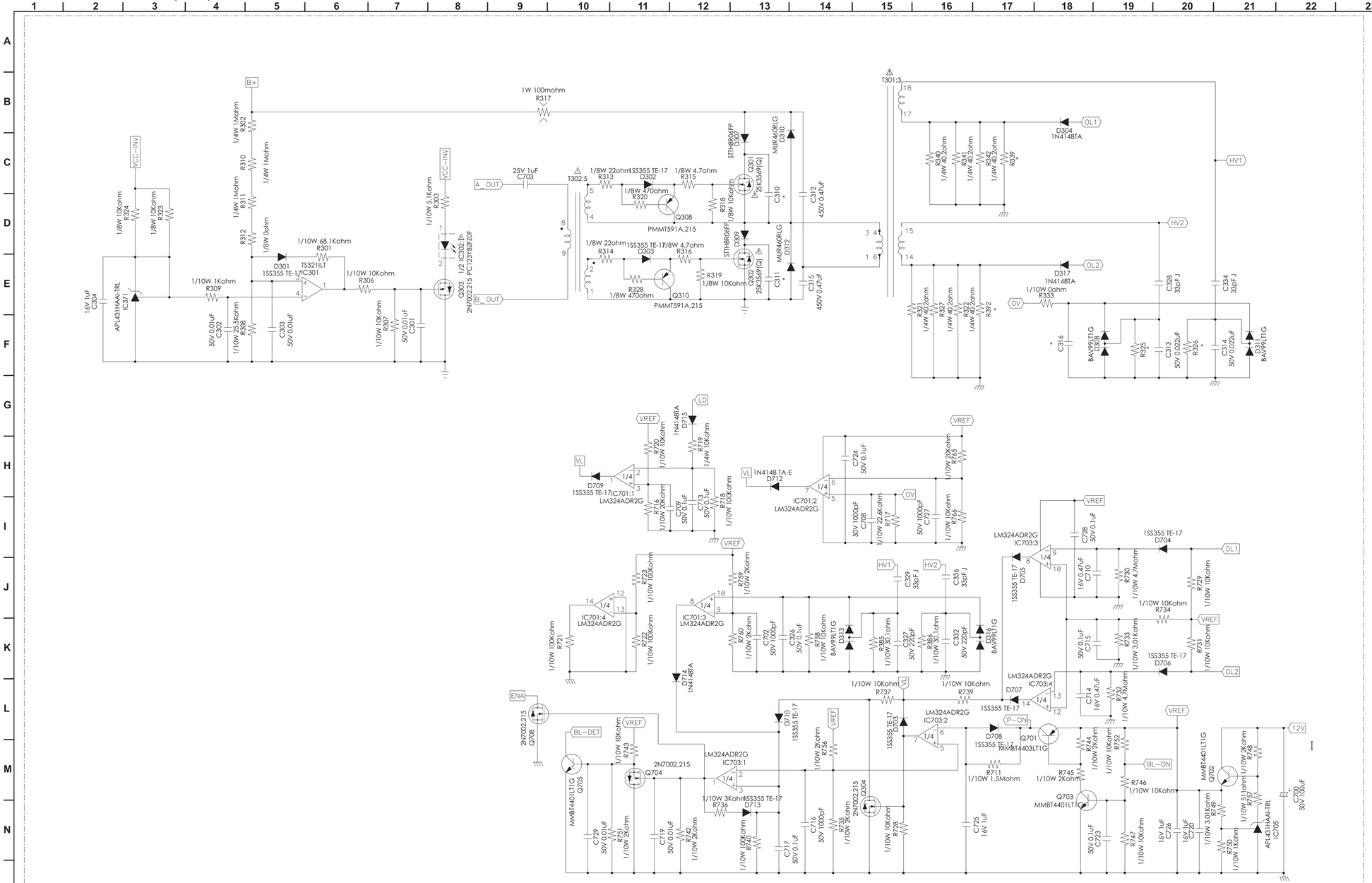

G 2/3
POWER (CONT.)

G BOARD SCHEMATIC DIAGRAM (3 OF 3)

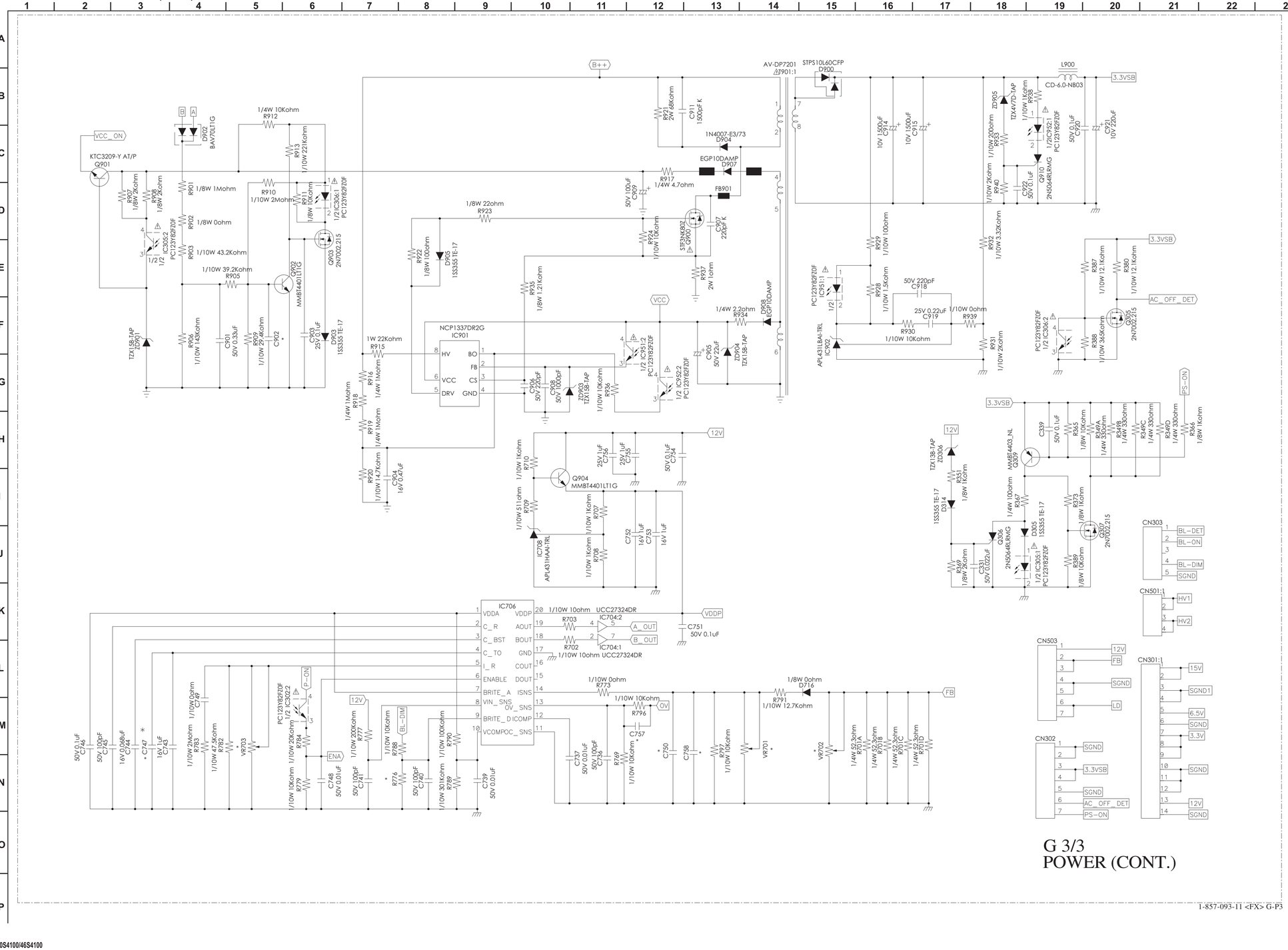

G 3/3
POWER (CONT.)

1-857-093-11 <FX> G-P3

G [POWER]
COMPONENT SIDE

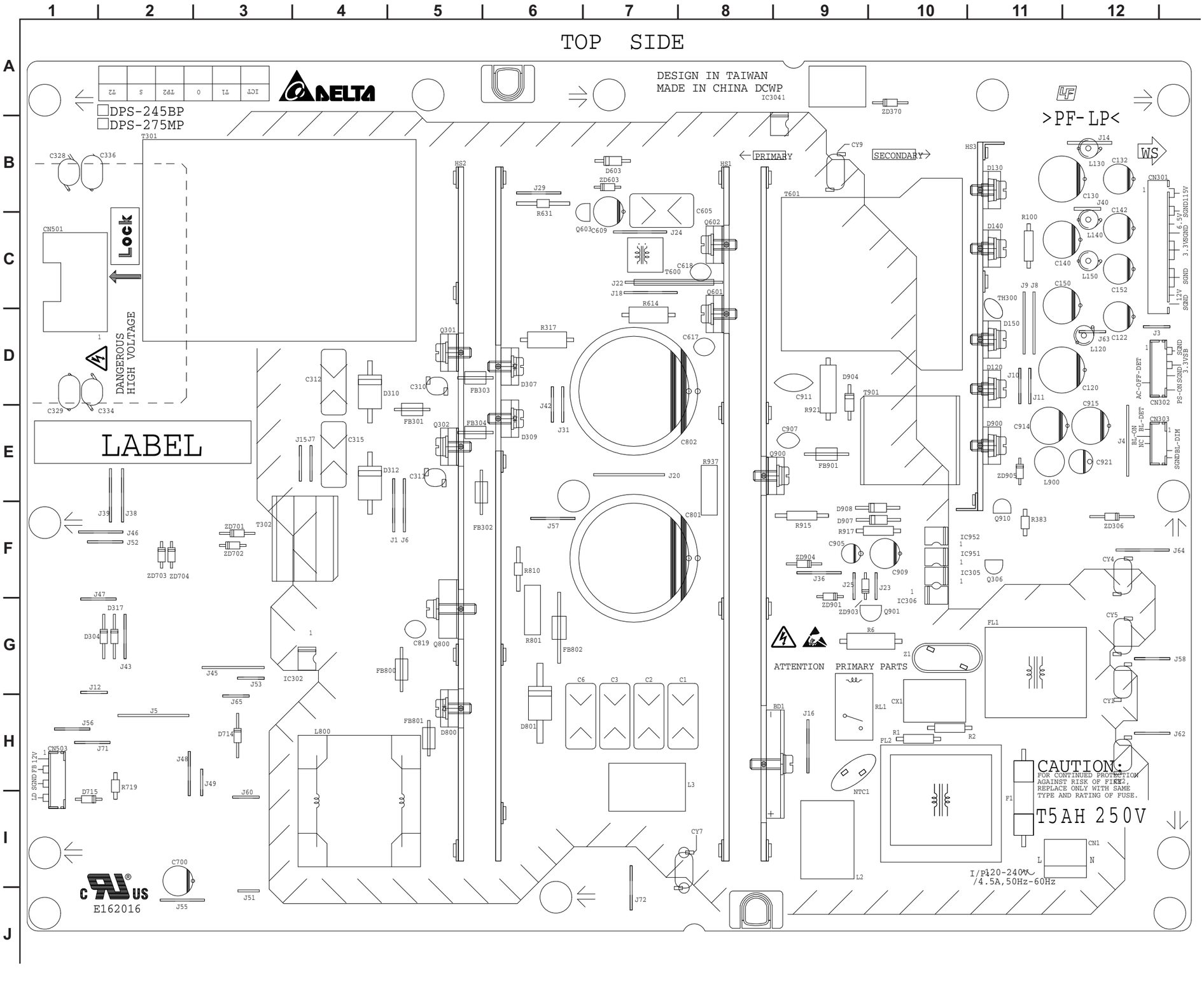

G [POWER]
CONDUCTOR SIDE

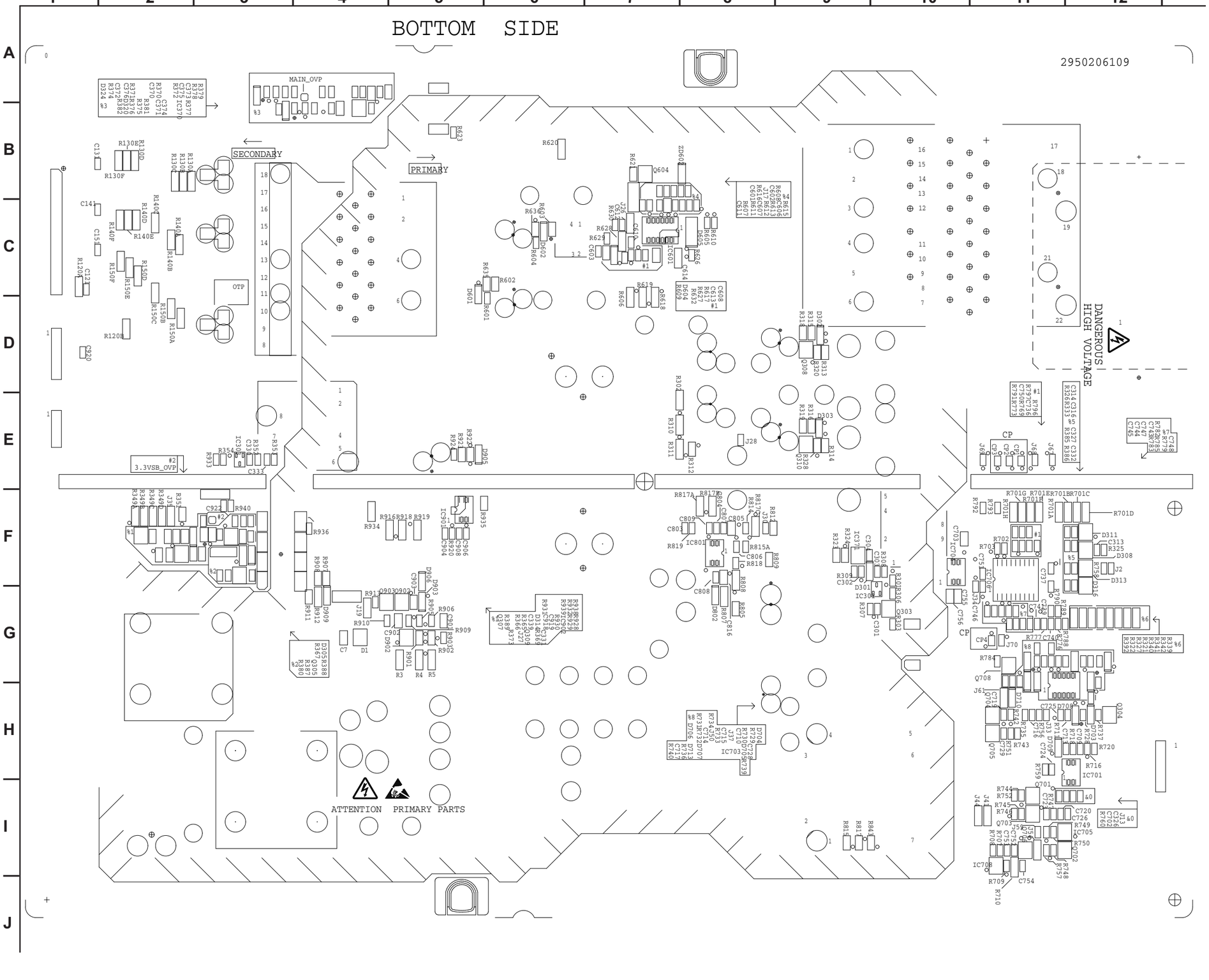

H1 BOARD SCHEMATIC DIAGRAM

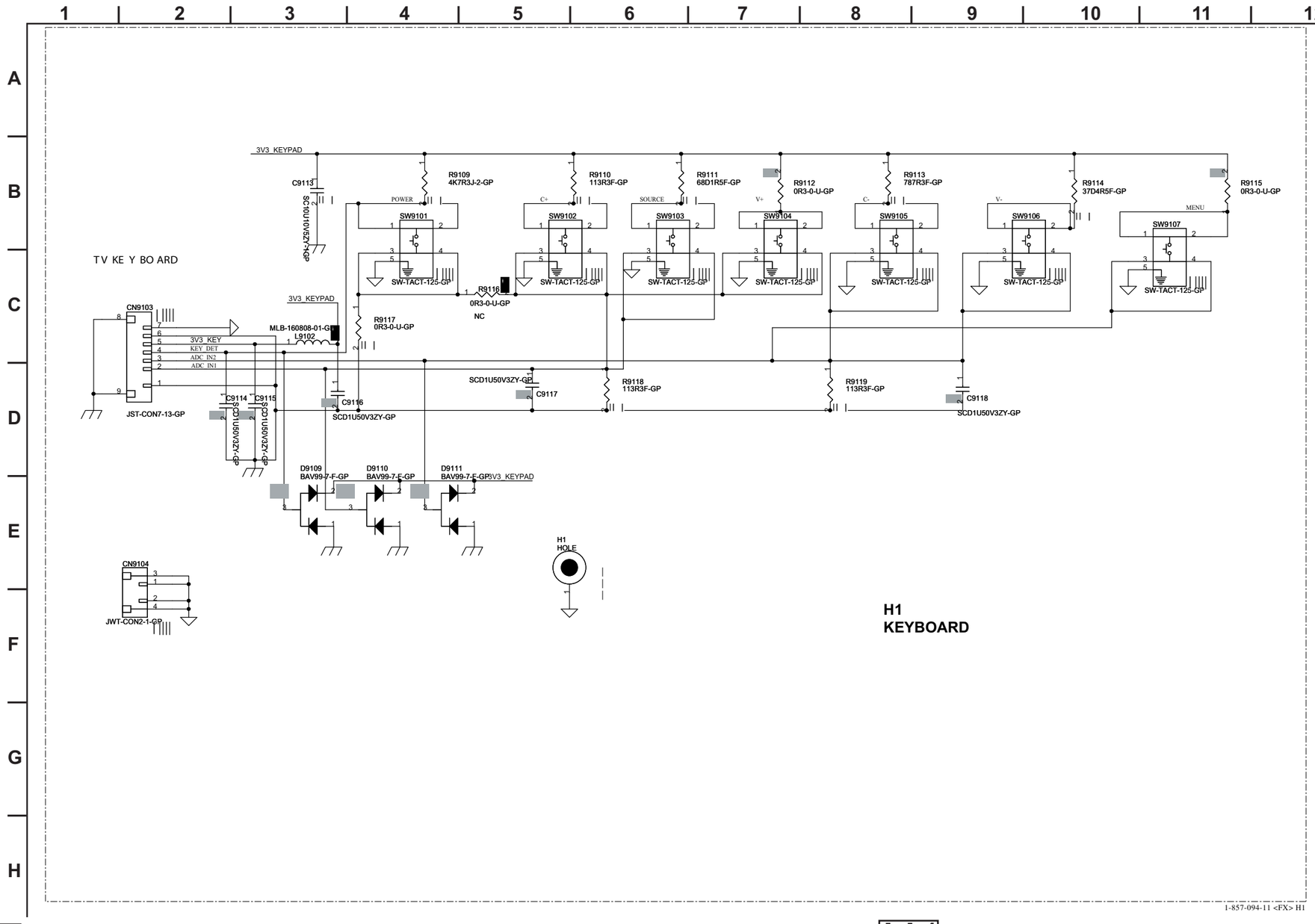

H1
KEYBOARD

1-857-094-11 <FX> H1

H1 [KEYBOARD] COMPONENT SIDE

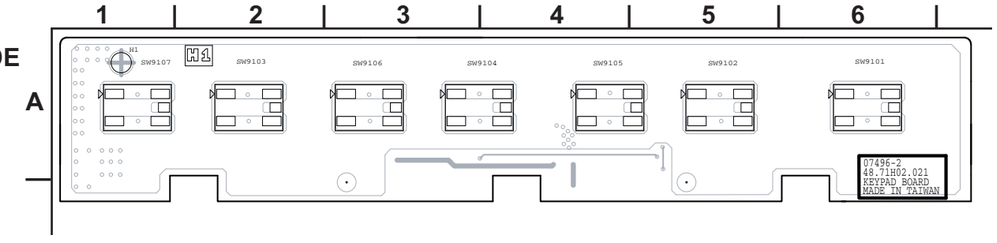

H1 [KEYBOARD] CONDUCTOR SIDE

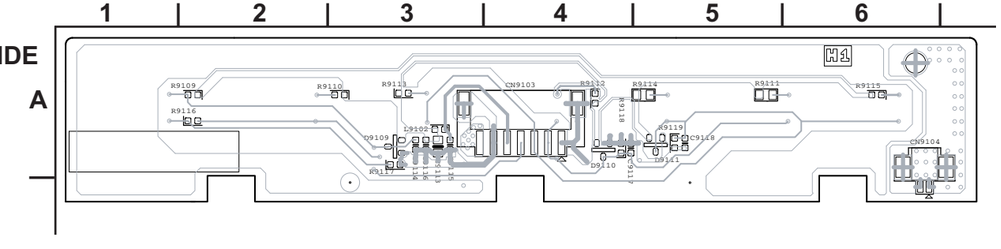

H2 BOARD SCHEMATIC DIAGRAM

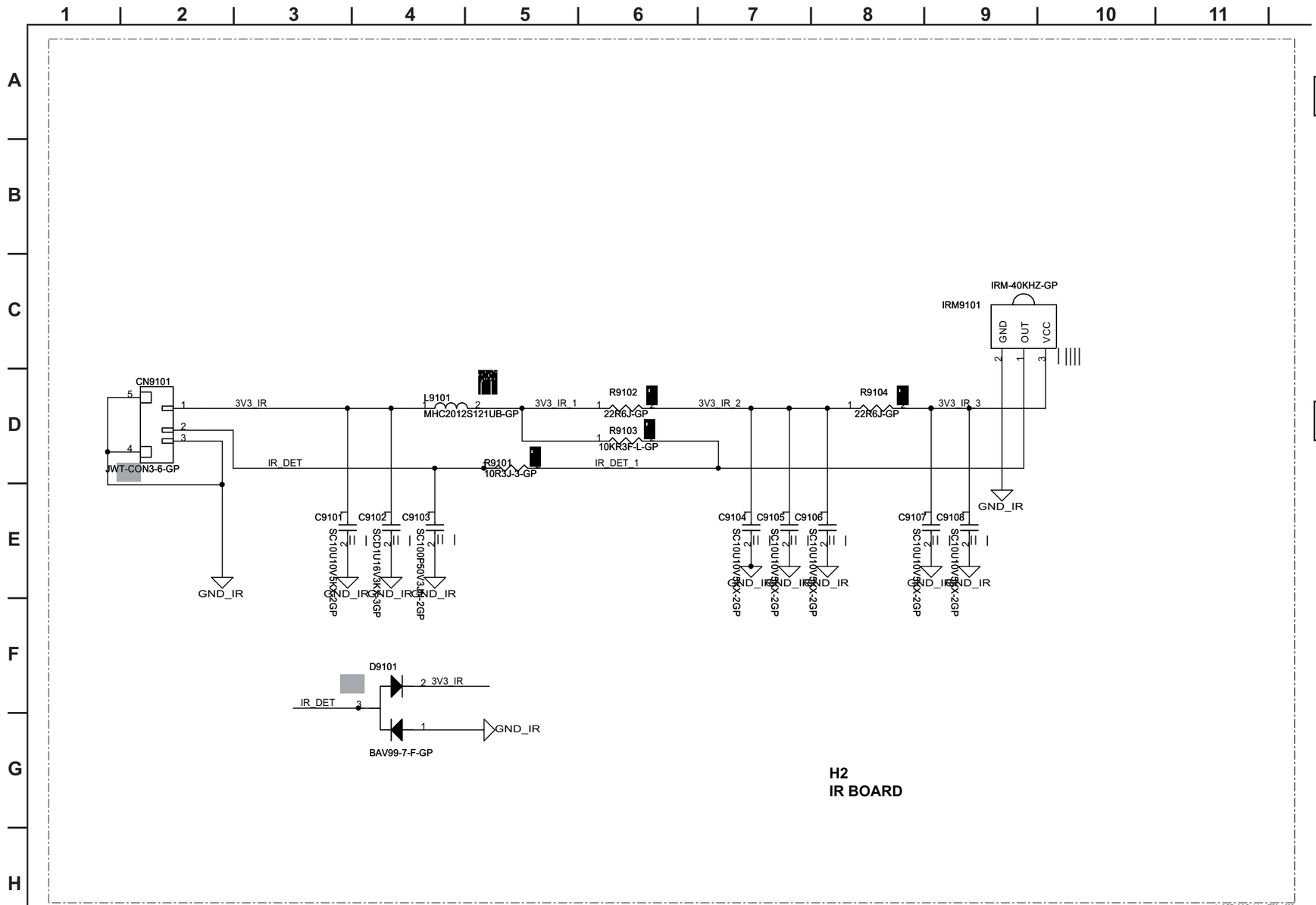

H2 [IR BOARD] COMPONENT SIDE

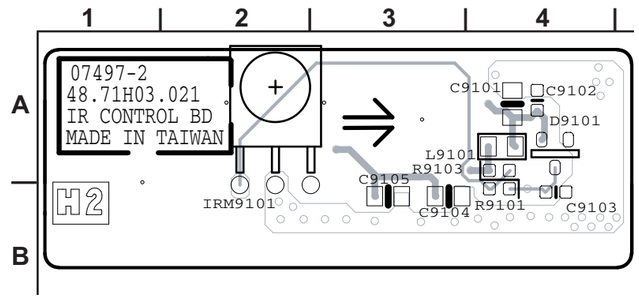

H2 [IR BOARD] CONDUCTOR SIDE

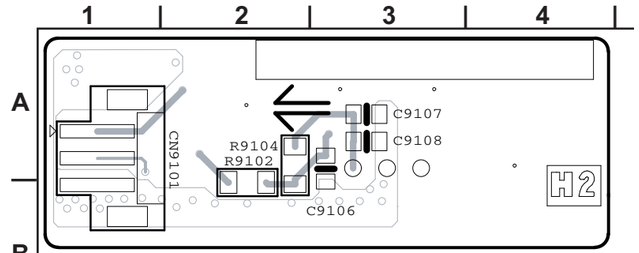

H3 BOARD SCHEMATIC DIAGRAM

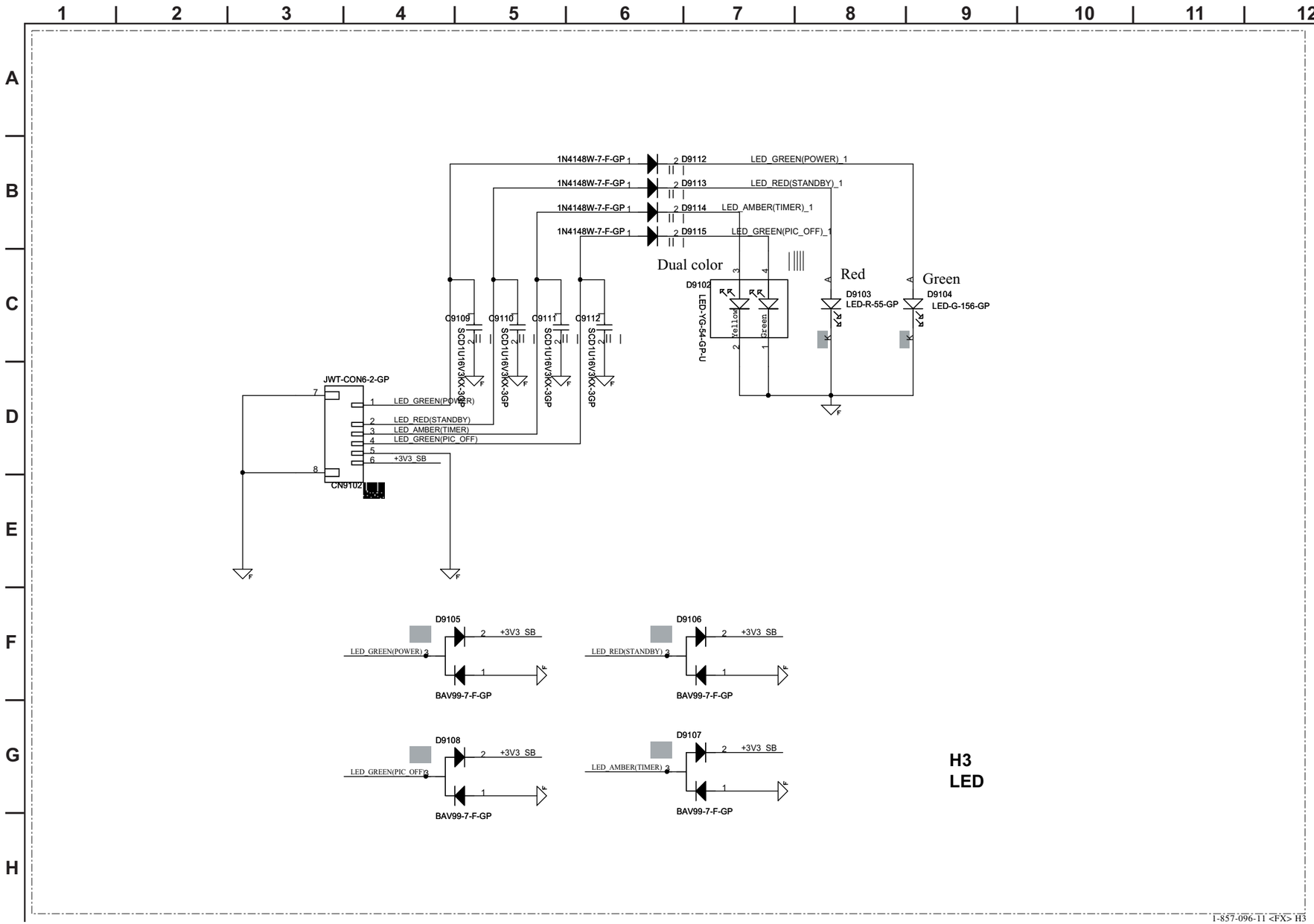

H3
LED

I-857-096-11 <FX> H3

H3 [LED] COMPONENT SIDE

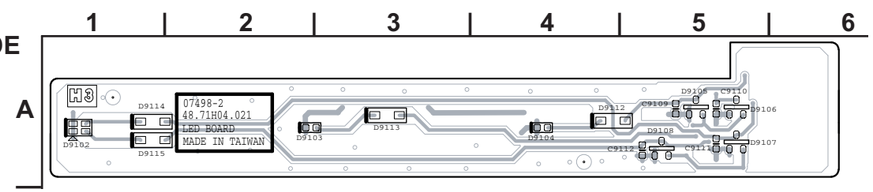

H3 [LED] CONDUCTOR SIDE

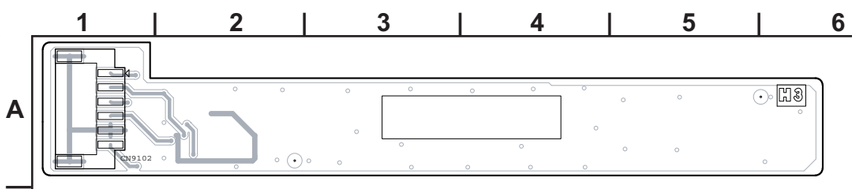

SECTION 4: EXPLODED VIEWS

Components not identified by a part number or description are not stocked because they are seldom required for routine service.

The component parts of an assembly are indicated by the reference numbers in the far right column of the parts list and within the dotted lines of the diagram.

* Items marked with an asterisk are not stocked since they are seldom required for routine service. Expect some delay when ordering these components.

NOTE: The components identified by shading and ⚠ mark are critical for safety. Replace only with part number specified.

NOTE: Les composants identifies per un trame et une marque ⚠ sont critiques pour la securite. Ne les remplacer que par une piece portant le numero specifie.

NOTE: The components identified by a red outline and a 🔒 mark contain confidential information. Specific instructions must be adhered to whenever these components are repaired and/or replaced.
See Appendix A: Encryption Key Components in the back of this manual.

4-1. REAR COVER ASSEMBLY AND TABLE-TOP STAND ASSEMBLY

(Check the Sony Electronics Service Information website for any additional service related issues for this model.)

■	7-685-662-71	SCREW, +BVTP 4X14 TYPE 2 IT-3
□	7-682-973-49	SCREW, +PSW 5X16
▼	7-682-973-09	SCREW, +PSW 5X8
▽	7-685-647-79	SCREW, +BVTP 3X10 TYPE 2 IT-3
●	4-635-301-31	SCREW, M3X4
✲	2-580-644-01	SCREW, +KTP2 3X8

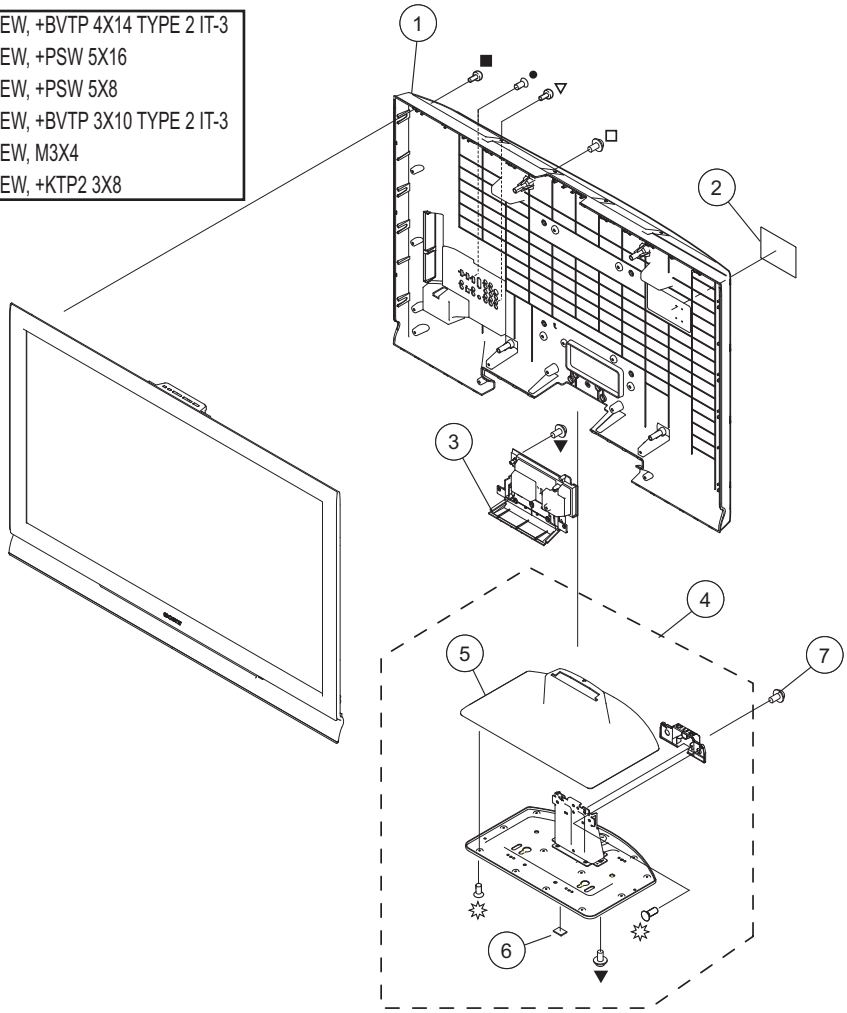

	REF. NO.	PART NO.	DESCRIPTION	[ASSEMBLY INCLUDES]
	1	X-2318-785-1	COVER, REAR ASSY(40) (KDL-40S4100 ONLY)	
	1	X-2318-786-1	COVER, REAR ASSY(46) (KDL-46S4100 ONLY)	
*	2	3-876-010-01	LABEL, INFORMATION (40) (KDL-40S4100 ONLY)	
*	2	3-876-028-01	LABEL, INFORMATION (46) (KDL-46S4100 ONLY)	
	3	3-874-661-01	COVER, UNDER	
☛	4	X-2318-167-1	TABLE-TOP STAND ASSY (40) (KDL-40S4100 ONLY)	[5-6]
☛	4	X-2318-169-1	TABLE-TOP STAND ASSY (46) (KDL-46S4100 ONLY)	[5-6]
	5	3-874-654-01	COVER, STAND (40) (KDL-40S4100 ONLY)	
	5	3-874-684-01	COVER, STAND (46) (KDL-46S4100 ONLY)	
	6	4-100-951-02	FOOT, STAND	
☛	7	7-682-973-49	SCREW, +PSW 5X16 (SCREWS TO ATTACH TABLE-TOP STAND TO TV)	

For product protection and safety reasons, Sony strongly recommends that you use the screws provided with the TV.

CAUTION: These screws cannot be used to secure the TV to Wall Mount Brackets.

NOTE: The components identified by shading and ⚠ mark are critical for safety. Replace only with part number specified.

NOTE: Les composants identifies per un trame et une marque ⚠ sont critiques pour la securite. Ne les remplacer que par une piece portant le numero specifie.

NOTE: The components identified by a red outline and a 🔒 mark contain confidential information. Specific instructions must be adhered to whenever these components are repaired and/or replaced.
See Appendix A: Encryption Key Components in the back of this manual.

4-2. CHASSIS

(Check the Sony Electronics Service Information website for any additional service related issues for this model.)

▼	7-682-973-09	SCREW, +PSW 5X8
●	4-635-301-31	SCREW, M3X4
☆	2-580-630-01	SCREW, +BVST 4X8
★	7-682-948-01	SCREW, +PSW 3X8
○	3-682-691-21	NUT, WASHER HEXAGON
▲	4-635-966-21	SCREW (HEX)

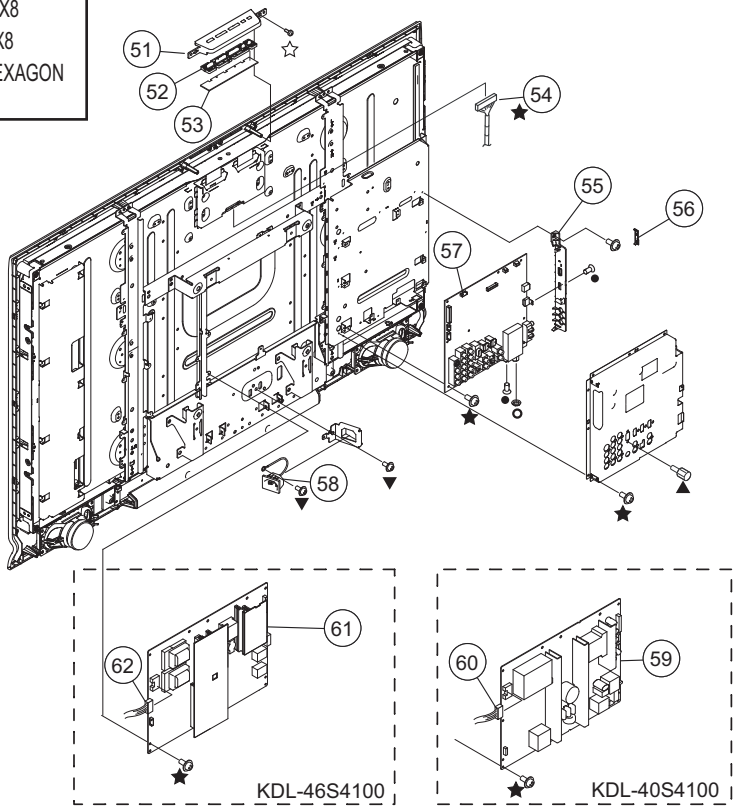

REF. NO.	PART NO.	DESCRIPTION	[ASSEMBLY INCLUDES]
51	3-874-656-01	COVER, KEY	
52	3-874-655-01	FUNCTION KEY	
53	1-857-094-11	H1 BOARD, MOUNTED	
☛ 54	N/A	CONNECTOR ASSY LVDS 40	
		(KDL-40S4100 ONLY)	
	FOR ALL LVDS CONNECTOR ASSY PART NUMBER		
	INFORMATION REFER TO THE LCD PANELS SERVICE MANUAL		
☛ 54	1N/A	CONNECTOR ASSY LVDS 46	
		(KDL-46S4100 ONLY)	
	FOR ALL LVDS CONNECTOR ASSY PART NUMBER		
	INFORMATION REFER TO THE LCD PANELS SERVICE MANUAL		
55	3-874-657-01	COVER, SIDE	
56	3-874-663-01	COVER, USB	
☛ 🔒 57	N/A	A BOARD, MOUNTED	
		(KDL-40S4100 ONLY)	
	FOR ALL MAIN BOARD PART NUMBER		
	INFORMATION REFER TO THE LCD PANELS SERVICE MANUAL		
☛ 🔒 57	N/A1	A BOARD, MOUNTED	
		(KDL-46S4100 ONLY)	
	FOR ALL MAIN BOARD PART NUMBER		
	INFORMATION REFER TO THE LCD PANELS SERVICE MANUAL		

REF. NO.	PART NO.	DESCRIPTION	[ASSEMBLY INCLUDES]
	If the Tuner fails, the complete A Board must be ordered.		
	The Tuner cannot be ordered separately.		
⚠ 58	1-822-086-11	AC INLET	
		(KDL-40S4100 ONLY)	
⚠ 58	1-822-086-21	AC INLET	
		(KDL-46S4100 ONLY)	
☛ 59	N/A	G BOARD, MOUNTED	
		(KDL-40S4100 ONLY)	
	FOR ALL POWER BOARD PART NUMBER		
	INFORMATION REFER TO THE LCD PANELS SERVICE MANUAL		
60	1-910-046-33	CONNECTOR ASSY INVERTER 40	
		(KDL-40S4100 ONLY)	
☛ 61	N/A	G BOARD, MOUNTED	
		(KDL-46S4100 ONLY)	
	FOR ALL POWER BOARD PART NUMBER		
	INFORMATION REFER TO THE LCD PANELS SERVICE MANUAL		
62	1-910-046-34	CONNECTOR ASSY INVERTER 46	
		(KDL-46S4100 ONLY)	

NOTE: The components identified by shading and ⚠ mark are critical for safety. Replace only with part number specified.

NOTE: Les composants identifies per un trame et une marque ⚠ sont critiques pour la securite. Ne les remplacer que par une piece portant le numero specifie.

NOTE: The components identified by a red outline and a 🔒 mark contain confidential information. Specific instructions must be adhered to whenever these components are repaired and/or replaced.
See Appendix A: Encryption Key Components in the back of this manual.

4-3. BEZEL ASSEMBLY AND LCD PANEL (KDL-40S4100 ONLY)

(Check the Sony Electronics Service Information website for any additional service related issues for this model.)

■	7-685-662-71	SCREW, +BVTP 4X14 TYPE 2 IT-3
▼	7-682-973-09	SCREW, +PSW 5X8
☆	2-580-630-01	SCREW, +BVST 4X8
★	7-682-948-01	SCREW, +PSW 3X8
△	7-682-962-01	SCREW, +PSW 4X10
✸	2-580-629-01	SCREW, +BVST 3X8

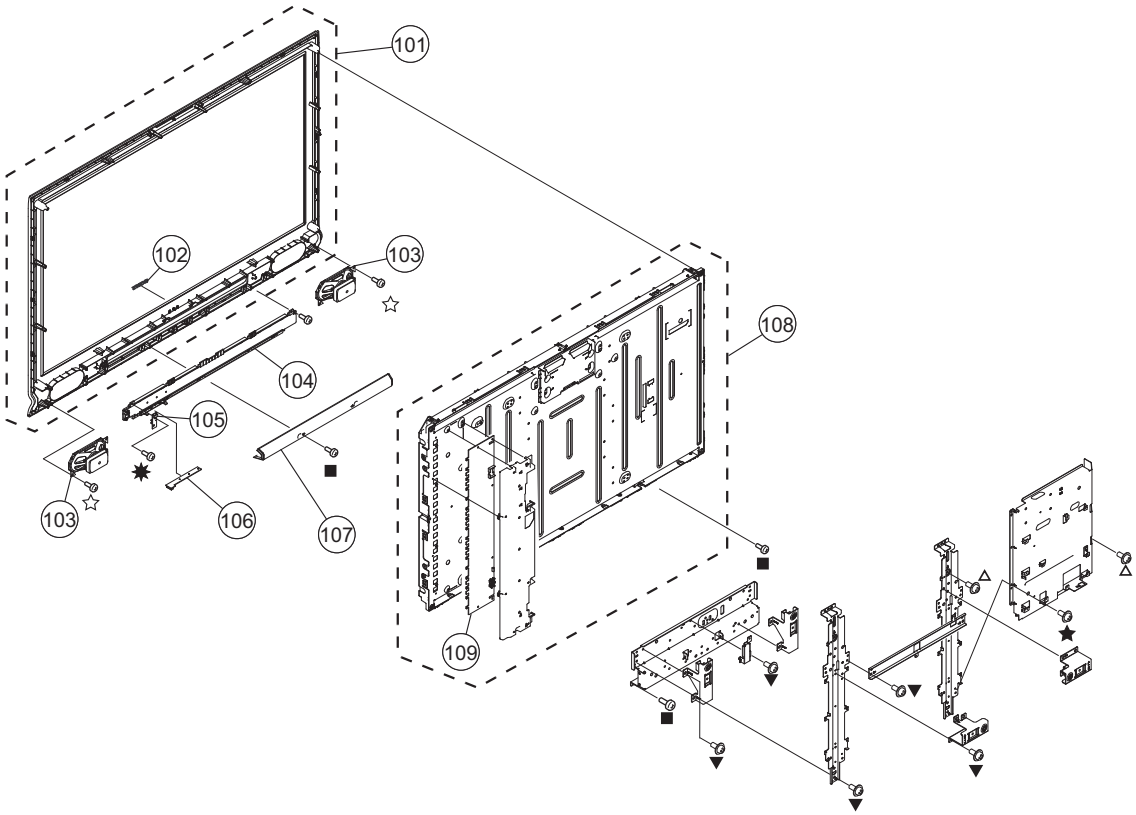

REF. NO.	PART NO.	DESCRIPTION	[ASSEMBLY INCLUDES]
101	X-2318-166-1	BEZEL ASSY (40)	[102]
102	4-103-642-21	EMBLEM, SONY NO.8	
103	1-826-946-11	SPEAKER (12X6CM)	
104	3-874-659-01	LENS LED (40)	
105	1-857-095-11	H2 BOARD, MOUNTED	
106	1-857-096-11	H3 BOARD, MOUNTED	
107	3-874-660-01	COVER, BOTTOM (40)	
☛108	N/A	LCD PANEL (40 FHD TFT)	[109]
		FOR ALL LCD PANEL PART NUMBER INFORMATION REFER TO THE LCD PANELS SERVICE MANUAL	
☛109	N/A	ETC-INVERTER MT BOARD	
		FOR ALL ETC-INVERTER MT BOARD PART NUMBER INFORMATION REFER TO THE LCD PANELS SERVICE MANUAL	

NOTE: The components identified by shading and ⚠ mark are critical for safety. Replace only with part number specified.

NOTE: Les composants identifies per un trame et une marque ⚠ sont critiques pour la securite. Ne les remplacer que par une piece portant le numero specifie.

NOTE: The components identified by a red outline and a 🔒 mark contain confidential information. Specific instructions must be adhered to whenever these components are repaired and/or replaced.
See Appendix A: Encryption Key Components in the back of this manual.

4-4. BEZEL ASSEMBLY AND LCD PANEL (KDL-46S4100 ONLY)

(Check the Sony Electronics Service Information website for any additional service related issues for this model.)

■	7-685-662-71	SCREW, +BVTP 4X14 TYPE 2 IT-3
▼	7-682-973-09	SCREW, +PSW 5X8
☆	2-580-630-01	SCREW, +BVST 4X8
★	7-682-948-01	SCREW, +PSW 3X8
△	7-682-962-01	SCREW, +PSW 4X10
✸	2-580-629-01	SCREW, +BVST 3X8

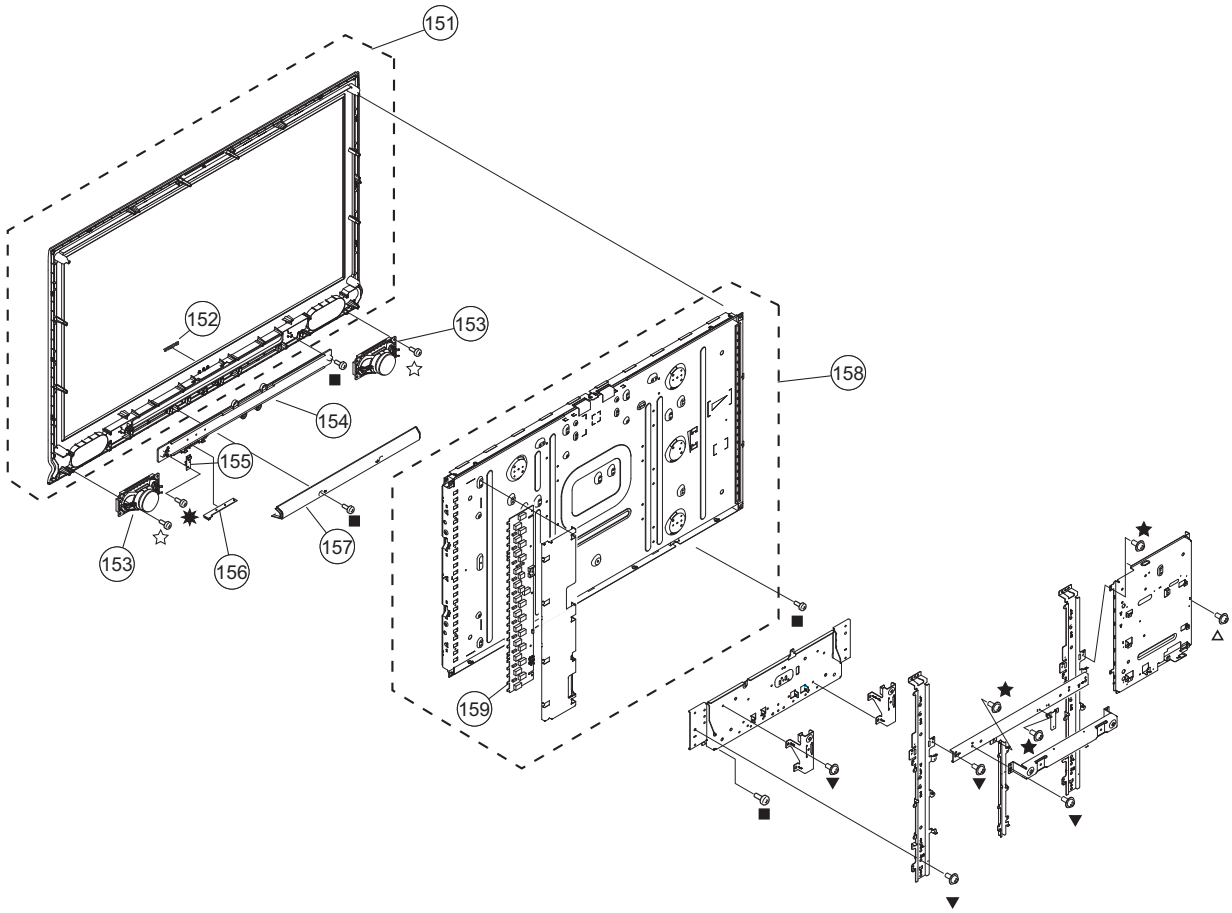

REF. NO.	PART NO.	DESCRIPTION	[ASSEMBLY INCLUDES]
151	X-2318-168-1	BEZEL ASSY (46)	[152]
152	2-635-749-11	EMBLEM, SONY NO.9	
153	1-826-959-11	SPEAKER (15X6.5CM)	
154	3-874-668-01	LENS LED (46)	
155	1-857-095-11	H2 BOARD MOUNTED	
156	1-857-096-11	H3 BOARD, MOUNTED	
157	3-874-669-01	COVER, BOTTOM (46)	
☛ 158	N/A	LCD PANEL (46 INCH FHD TFT)	[159]
		FOR ALL LCD PANEL PART NUMBER INFORMATION REFER TO THE LCD PANELS SERVICE MANUAL	
☛ 159	N/A	ETC-INVERTER MT BOARD	
		FOR ALL ETC-INVERTER MT BOARD PART NUMBER INFORMATION REFER TO THE LCD PANELS SERVICE MANUAL	

4-5. SCREW LEGEND

KDL-40S4100

	P/N	DISCRIPTION	LOCATION	TOTAL
■	7-685-662-71	SCREW, +BVTP 4X14 TYPE2 IT-3	Rear Cover-19 Bottom Brkt-4 LCD Panel-2 Bottom Cover-2	27
☐	7-682-973-49	SCREW, +PSW 5X16	Rear Cover-6 Table-Top Stand-4	10
▼	7-682-973-09	SCREW, +PSW 5X8	Under Cover-2 Vesa Brkt-8 Vesa Support-2 Spine-2 G Support-1 AC Brkt-1 AC Ground-1 Stand-5	22
▽	7-685-647-79	SCREW, +BVTP 3X10 TYPE2 IT-3	Terminal-2	2
●	4-635-301-31	SCREW, M3X4	Rear Cover-2 Side Brkt-1 Main Shld-1	4
☆	2-580-630-01	SCREW, +BVST 4X8	Sperker-8 Function Key-2 Lens LED-4	14
★	7-682-948-01	SCREW, +PSW 3X8	Main Shld-8 A-9 G-8 Main Brkt-5 LVDS-2 H1 Ground-1	33
o	3-682-691-21	NUT, WASHER HEXAGON	Tuner-1	1
▲	4-635-966-21	SCREW (HEX)	Main Shld-2	2
△	7-682-962-01	SCREW, +PSW 4X10	Main Brkt-1 Spine-4	5
✸	2-580-629-01	SCREW, +BVST 3X8	H2-1	1
✡	2-580-644-01	SCREW, +KTP2 3X8	Stand-14	14

KDL-46S4100

	P/N	DISCRIPTION	LOCATION	TOTAL
■	7-685-662-71	SCREW, +BVTP 4X14 TYPE2 IT-3	Rear Cover-19 Bottom Brkt-4 LCD Panel-2 Lens LED-4 Bottom cover-2	31
☐	7-682-973-49	SCREW, +PSW 5X16	Rear Cover-6 Table-Top Stand-4	10
▼	7-682-973-09	SCREW, +PSW 5X8	Under Cover-2 Vesa Brkt-6 Vesa Support-2 Spine-10 G Support-4 AC Brkt-1 AC Ground-1 Stand-6	32
▽	7-685-647-79	SCREW, +BVTP 3X10 TYPE2 IT-3	Terminal-2	2
●	4-635-301-31	SCREW, M3X4	Rear Cover-2 Side Brkt-1 Main Shld-1	4
☆	2-580-630-01	SCREW, +BVST 4X8	Sperker-8 Function Key-2	10
★	7-682-948-01	SCREW, +PSW 3X8	Main Shld-8 A-10 G-8 Main Brkt-2 LVDS-2 H1 Ground-1	31
o	3-682-691-21	NUT, WASHER HEXAGON	Tuner-1	1
▲	4-635-966-21	SCREW (HEX)	Main Shld-2	2
△	7-682-962-01	SCREW, +PSW 4X10	Main Brkt-1 Spine-4	5
✸	2-580-629-01	SCREW, +BVST 3X8	H2-1	1
✡	2-580-644-01	SCREW, +KTP2 3X8	Stand-14	14

NOTE: The components identified by shading and ⚠ mark are critical for safety. Replace only with part number specified.

NOTE: Les composants identifies per un trame et une marque ⚠ sont critiques pour la securite. Ne les remplacer que par une piece portant le numero specifie.

REF. NO.	PART NO.	DESCRIPTION	VALUES
		ACCESSORIES AND PACKING	
*	3-876-008-01	BAG, PROTECTION (40) (KDL-40S4100 ONLY)	
*	3-876-026-01	BAG, PROTECTION (46) (KDL-46S4100 ONLY)	
*	3-876-009-01	BAG, PROTECTION STAND (40) (KDL-40S4100 ONLY)	
*	3-876-027-01	BAG, PROTECTION STAND (46) (KDL-46S4100 ONLY)	
*	3-874-961-01	CARTON, INDIVIDUAL (40) (KDL-40S4100 US ONLY)	
*	3-874-962-01	CARTON, INDIVIDUAL (40) (KDL-40S4100 CANADA/MEXICO ONLY)	
*	3-874-963-01	CARTON, INDIVIDUAL (46) (KDL-46S4100 US/CANADA/MEXICO ONLY)	
*	3-876-005-01	CUSHION, BOTTOM L (40) (KDL-40S4100 ONLY)	
*	3-876-022-01	CUSHION, BOTTOM L (46) (KDL-46S4100 ONLY)	
*	3-876-004-01	CUSHION, BOTTOM R (40) (KDL-40S4100 ONLY)	
*	3-876-021-01	CUSHION, BOTTOM R (46) (KDL-46S4100 ONLY)	
*	3-876-003-01	CUSHION, UPPER L (40) (KDL-40S4100 ONLY)	
*	3-876-020-01	CUSHION, UPPER L (46) (KDL-46S4100 ONLY)	
*	3-876-002-01	CUSHION, UPPER R (40) (KDL-40S4100 ONLY)	
*	3-876-019-01	CUSHION, UPPER R (46) (KDL-46S4100 ONLY)	
	3-870-416-11	GUIDE, QUICK SET UP (ENGLISH VERSION)	
	3-870-416-21	GUIDE, QUICK SET UP (FRENCH VERSION)	
	3-870-416-31	GUIDE, QUICK SET UP (SPANISH VERSION)	
	3-870-414-11	MANUAL, INSTRUCTION (ENGLISH VERSION)	
	3-870-414-21	MANUAL, INSTRUCTION (FRENCH VERSION)	
	3-870-414-31	MANUAL, INSTRUCTION (SPANISH VERSION)	
*	3-870-415-11	MANUAL, INSTRUCTION (WALL MOUNT)	
		MISCELLANEOUS	
⚠	1-834-069-21	POWER-SUPPLY CORD SET	
	2-580-608-01	SCREW, +PSW M5X16	
☛	7-682-973-49	SCREW, +PSW 5X16	
		(SCREWS TO ATTACH TABLE-TOP STAND TO TV)	
		For product protection and safety reasons, Sony strongly recommends that you use the screws provided with the TV.	
		CAUTION: These screws cannot be used to secure the TV to Wall Mount Brackets.	
☛	X-2186-601-1	SUPPORT BELT KIT	
		REMOTE COMMANDER	
	1-480-722-11	REMOTE COMMANDER (RM-YD025)	
	9-885-110-88	COVER, BATTERY (for RM-YD025)	

© 2008.04

APPENDIX A: ENCRYPTION KEY COMPONENTS

Encryption key components developed by Sony Corporation contain confidential information, and shall be handled under the non-disclosure obligations provided in the applicable agreement with Sony Corporation (and/or its subsidiary).

As part of this agreement specific instructions must be adhered to whenever a Circuit Board containing encryption key components is repaired and/or replaced pursuant to the following:

1) **In the service manual the Circuit Board(s) containing encryption key components shall be identified with a red outline and a .**

2) **Only repair boards or components listed in the service manual shall be utilized for replacement and/or repair.**

3) **Disassembly, decryption, or reverse-engineering component(s) is strictly prohibited.**

4) **Any board in which the Servicer replaces an encryption key component must be placed back into the set it orignally came from and the replaced defective component MUST BE DESTROYED. Boards cannot be swapped.**

5) **If a Circuit Board identified with a red outline and a in the service manual is deemed to be defective:**

   a) **and if a core charge is imposed and is covered under the product warranty, the defective un-repaired or modified board MUST BE RETURNED to Sony.**

   b) **and if the core charge is NOT covered under the product warranty, the defective un-repaired or modified board MUST BE DESTROYED.**

5) **If a unit is destroyed (such as field scrap), the Circuit Board identified with a red outline and a in the service manual MUST BE DESTROYED.**

SERVICE MANUAL FX CHASSIS

In an effort to reduce the size of this pdf file the tiled schematics are not attached to this Service Manual. To receive a complete set of the tiled schematics for this manual please submit a request to the Service Promotion Department at Service_Promotion@am.sony.com.